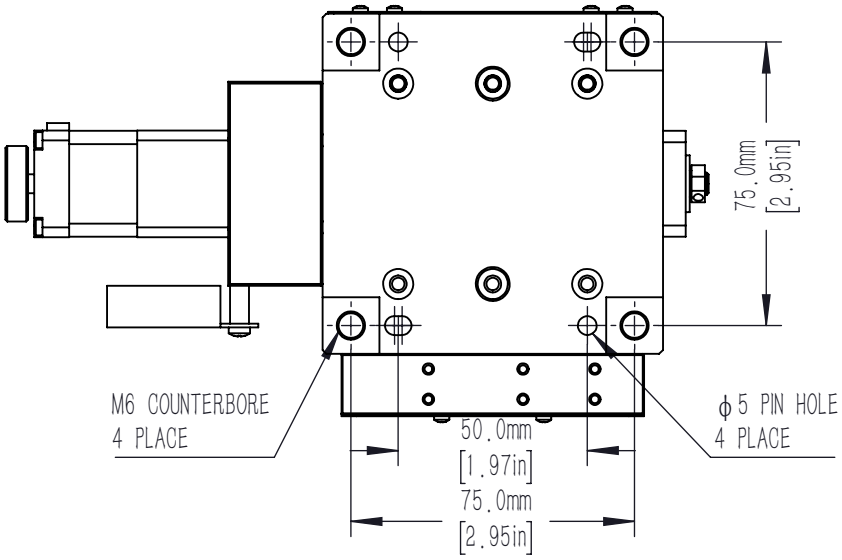

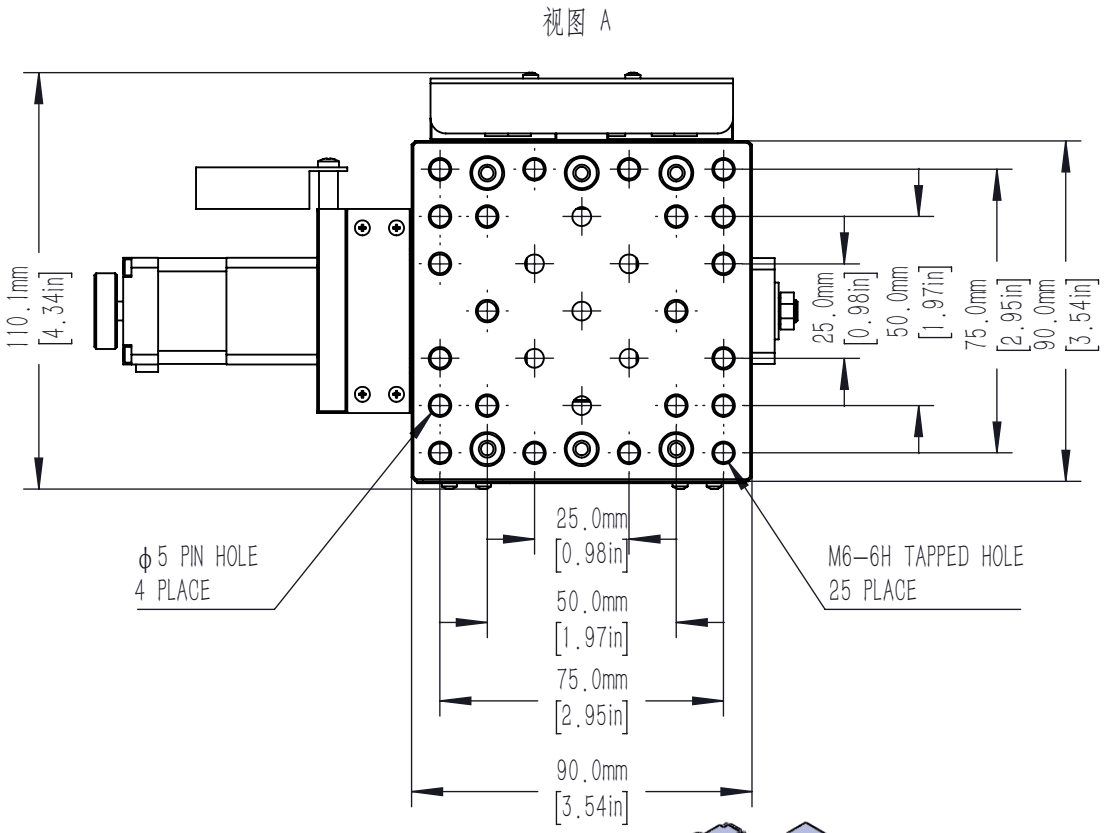

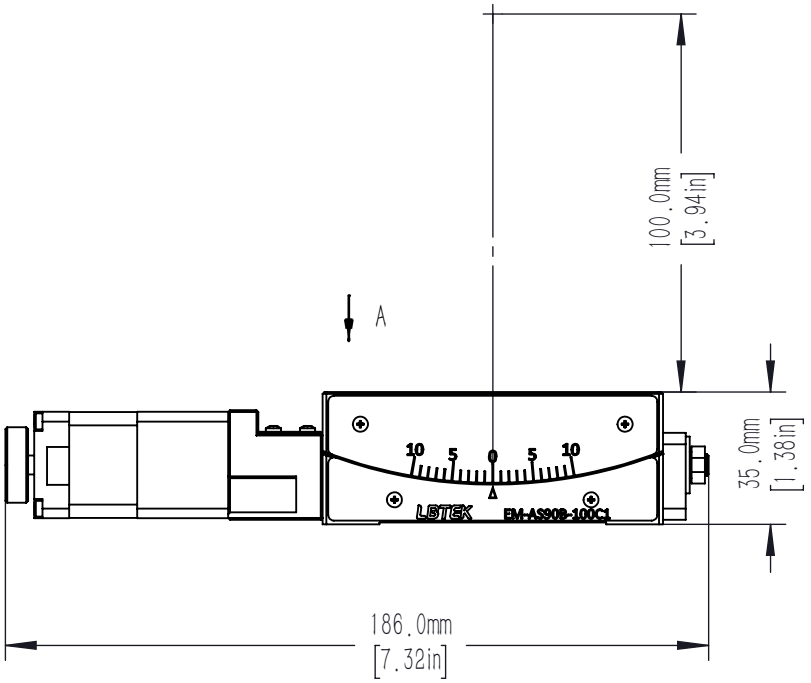

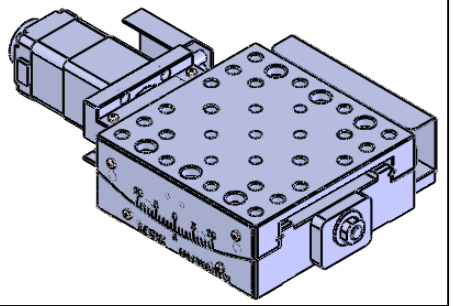

DRAWING PROJECTION			LBTEK			
	NAME	DATE	EM–AS90B–100C1			
DRAWN	ZLI	MAR./6th/20	ELETRIC ANGLE STAGE			
APPROVAL	YLI	MAR./6th/20	MATERIAL	WEIGHT	SCALE	REV
FOR INFORMATION ONLY NOT FOR MANUFACTURING PURPOSES			N/A	1.197 Kg	1:2	A