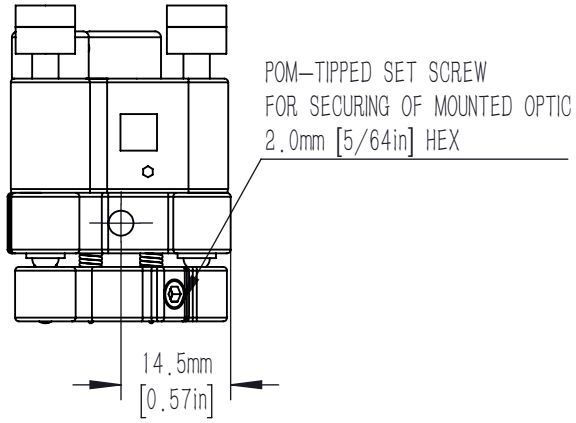

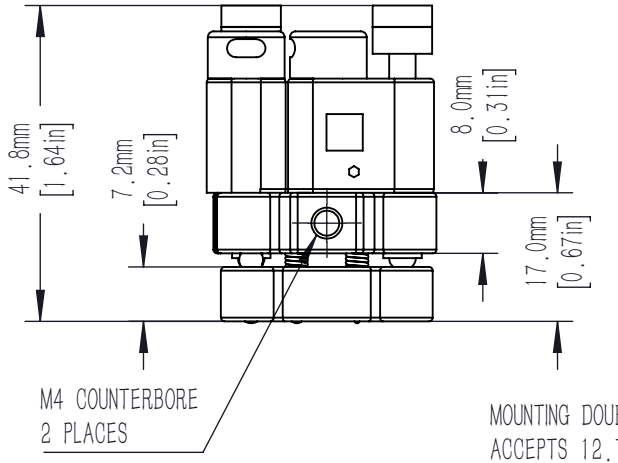

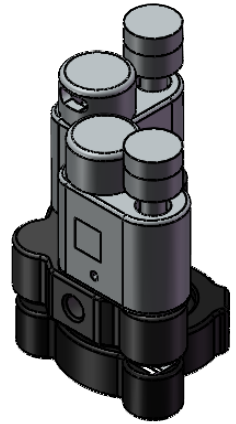

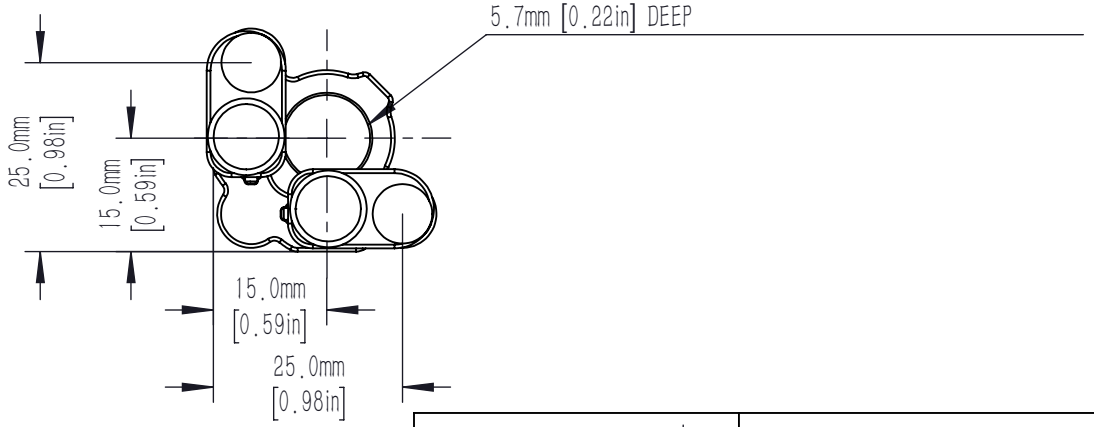

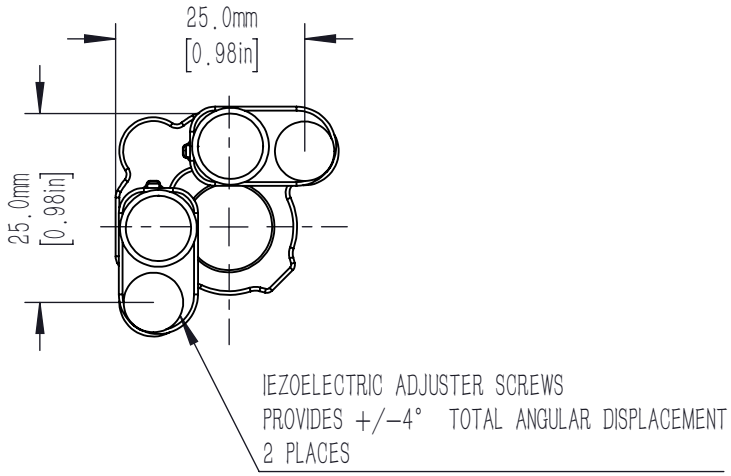

DRAWING PROJECTION			LBTEK			
	NAME	DATE	AMM–05B–E			
DRAWN	RYAN	MAR./6th/20				
APPROVAL	HYB	MAR./6th/20	MATERIAL	WEIGHT	SCALE	REV
FOR INFORMATION ONLY NOT FOR MANUFACTURING PURPOSES			N/A	0.026 Kg	1:1	AM