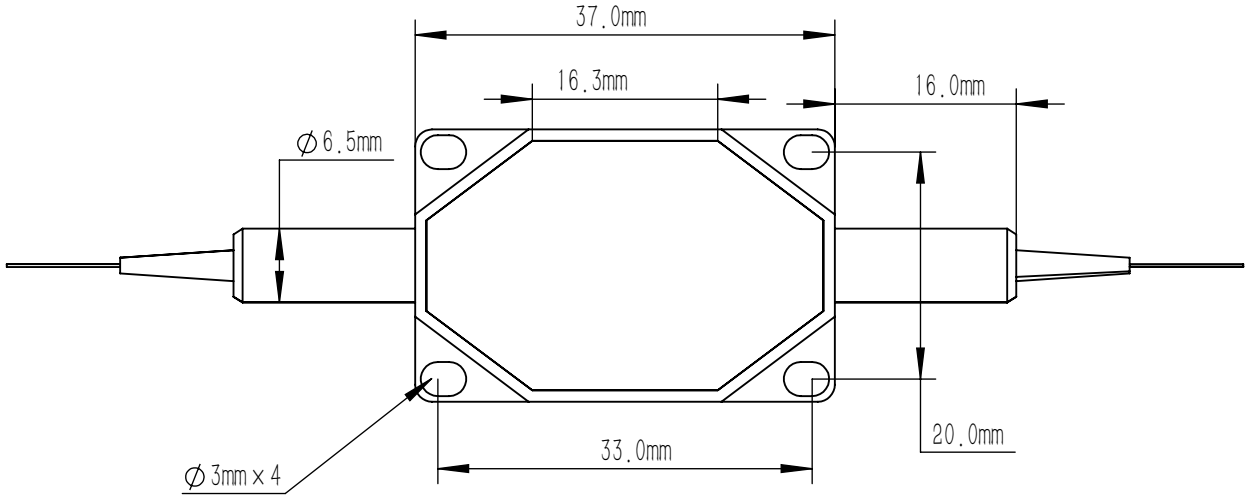

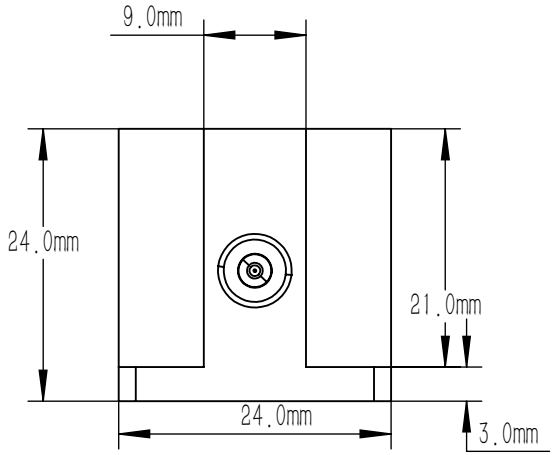

NOTES

1. FIBER TYPE:630-HP
2. OPERATION WAVELENGTH:635 nm
3. FIBER LENGTH: ⩾0.8 m
4. FIBER OPTIC CONNECTOR:FC/APC

DRAWING PROJECTION			LBTEK			
	NAME	DATE	FOI-635-FA-0.1W			
DRAWN	BSHU	Aug./26th/24	FIBER ISOLATOR ,635 nm 0.1W FC/APC			
APPROVAL	WCHENG	Aug./26th/24	MATERIAL	WEIGHT	SCALE	REV
FOR INFORMATION ONLY NOT FOR MANUFACTURING PURPOSES			ALUMINUM ALLO	130 g	3:2	A