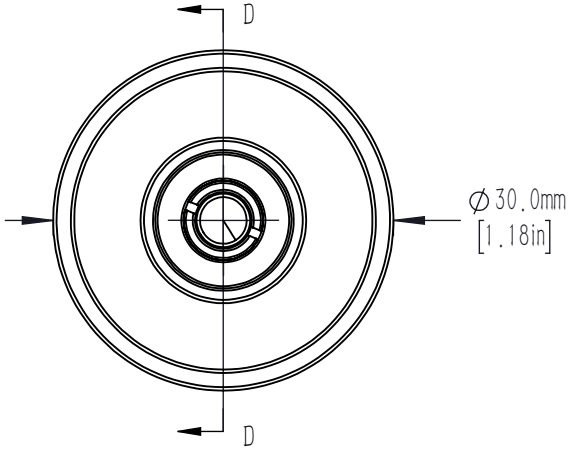

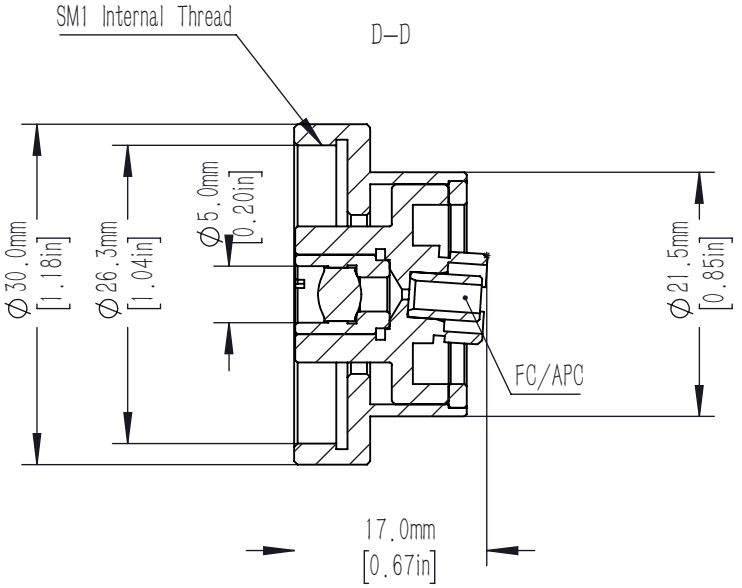

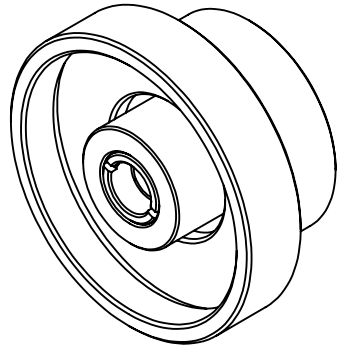

NOTE

1. Focal Length: 2.8 mm
2. AR COATING:R≤0.5%@ 1000 nm–1700 nm
3. USE INTERFACES: FC/APC

DRAWING PROJECTION			LBTEK			
	NAME	DATE	PDFCC–APC			
DRAWN	BSHU	2026/4/27	Detector Coupler			
APPROVAL	WCHENG	2026/4/27	MATERIAL	WEIGHT	SCALE	REV
FOR INFORMATION ONLY NOT FOR MANUFACTURING PURPOSES			D–ZLaF52LA	0.035kg	3:2	A