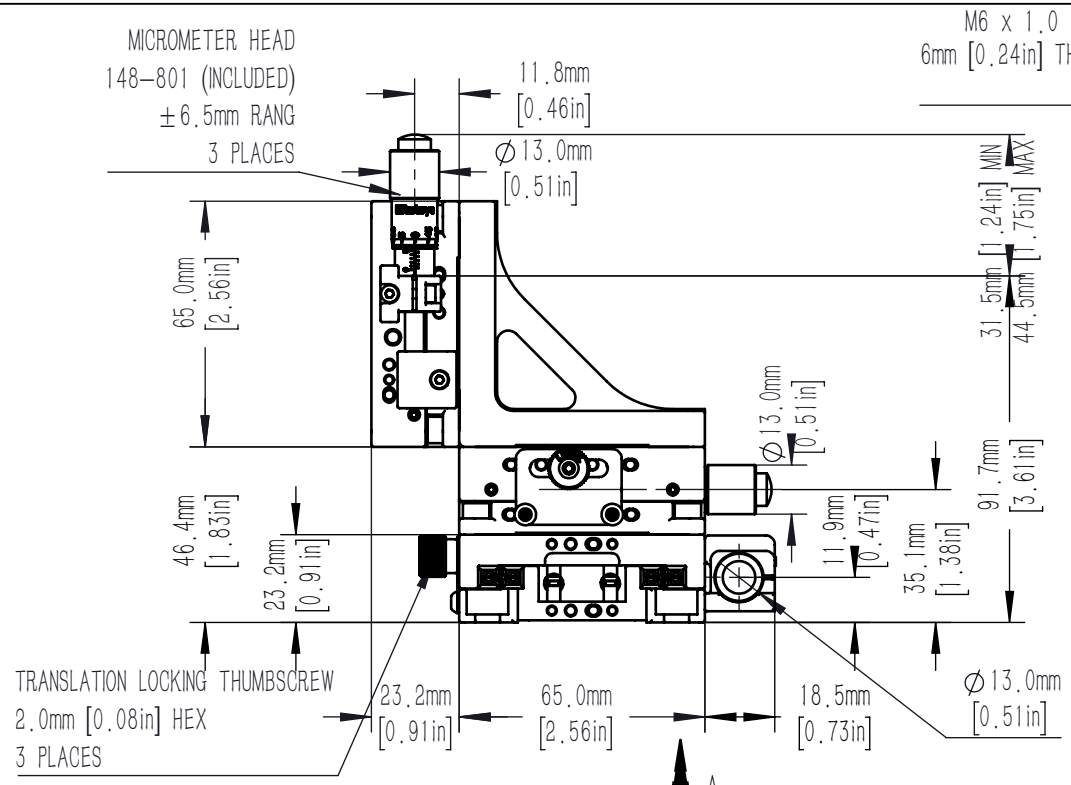

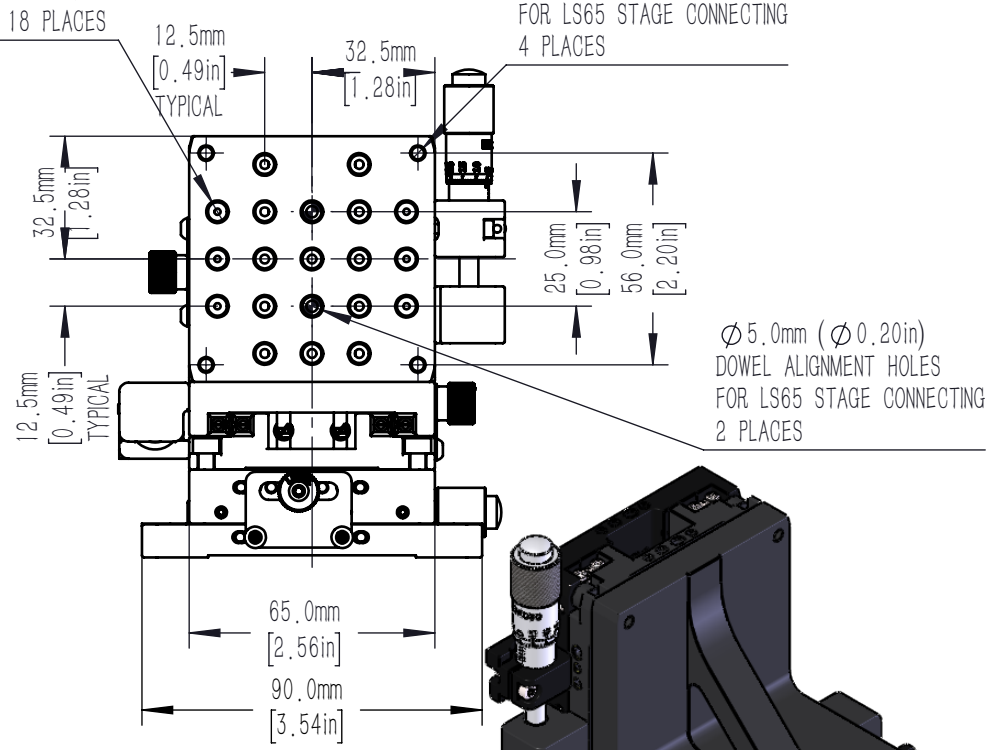

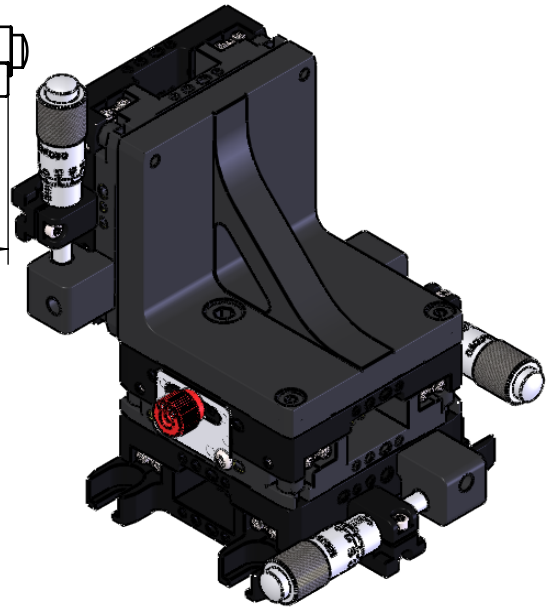

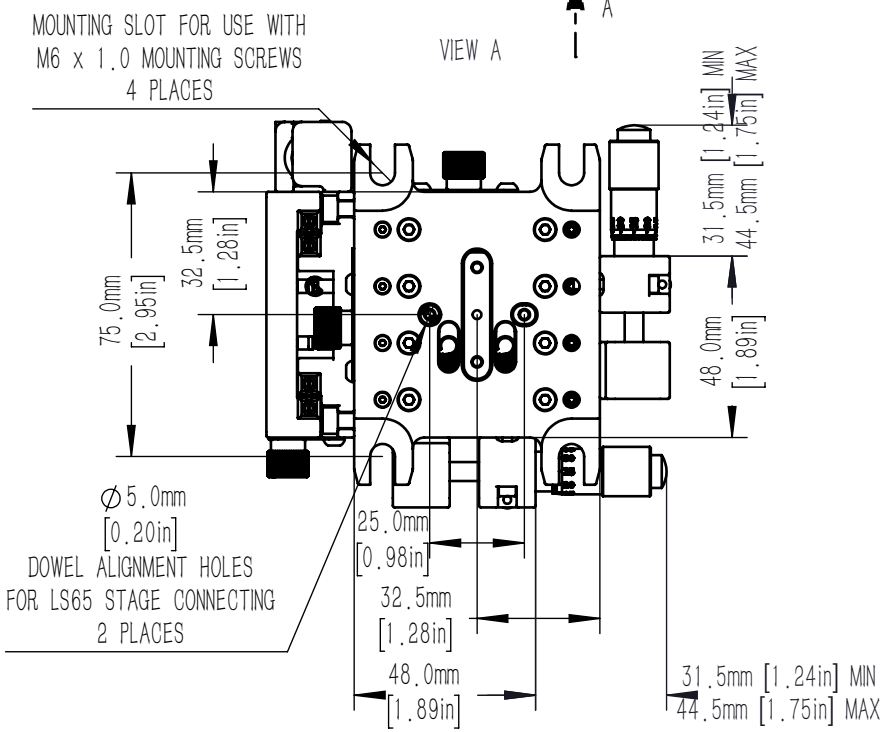

DRAWING PROJECTION			LBTEK www.lbtek.com			
	NAME	DATE	LS65-13R3			
DRAWN	ZHE	SEP./9th/19	13mm CROSSED ROLLER TRANSLATION STAGE (RIGHT DRIVING, THREE AXIS)			
APPROVAL	ERIC	SEP./9th/19	MATERIAL	WEIGHT	SCALE	REV
FOR INFORMATION ONLY NOT FOR MANUFACTURING PURPOSES			N/A	1.08 Kg	1:2	B