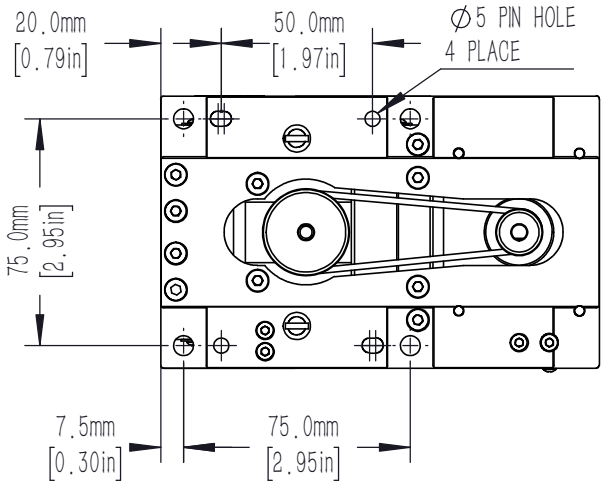

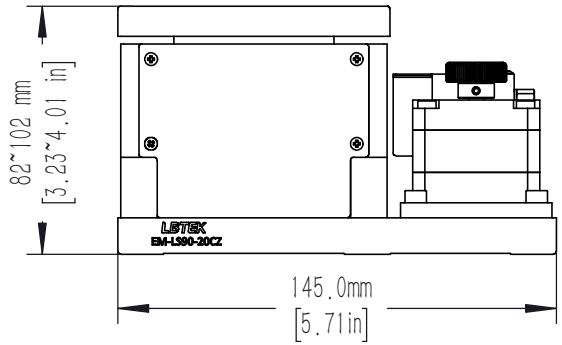

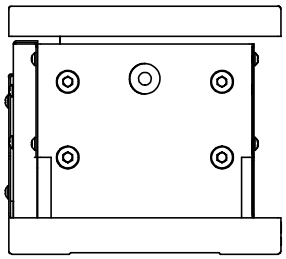

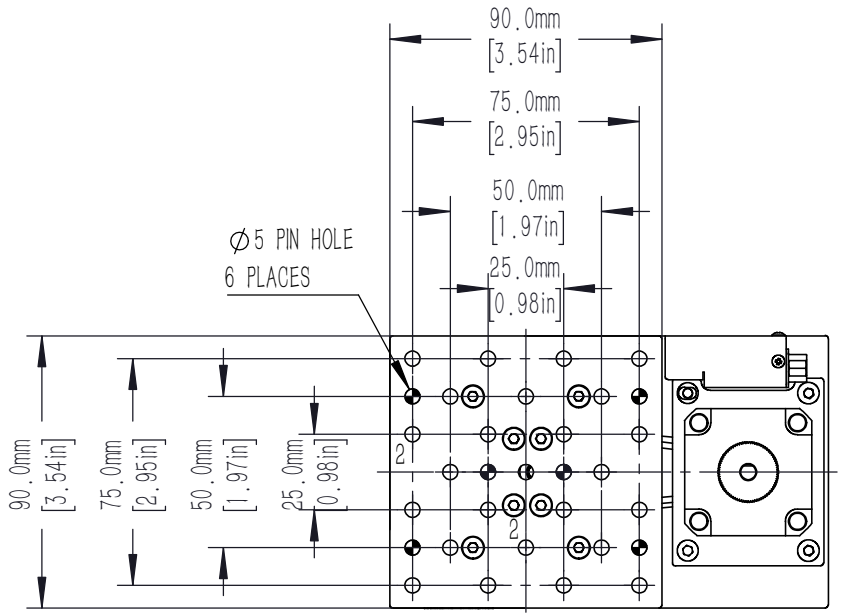

DRAWING PROJECTION			LBTEK			
	NAME	DATE	EM-LS90-20CZ			
DRAWN	BJU	DEC./13th/21	ELECTRIC VERTICAL STAGE			
APPROVAL	ZXU	DEC./13th/21	MATERIAL	WEIGHT	SCALE	REV
FOR INFORMATION ONLY NOT FOR MANUFACTURING PURPOSES			6061	1.95 Kg	1:2.5	D