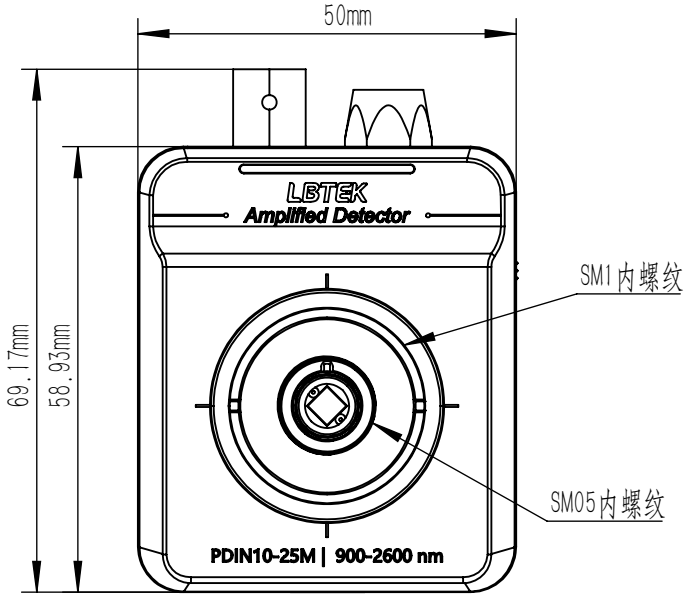

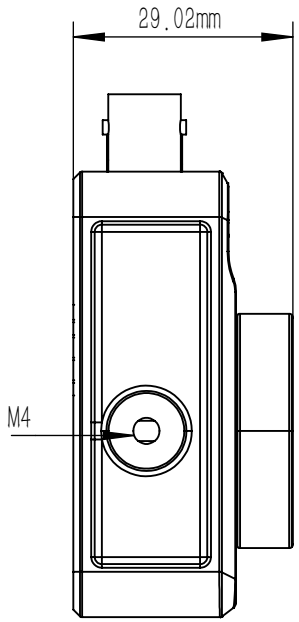

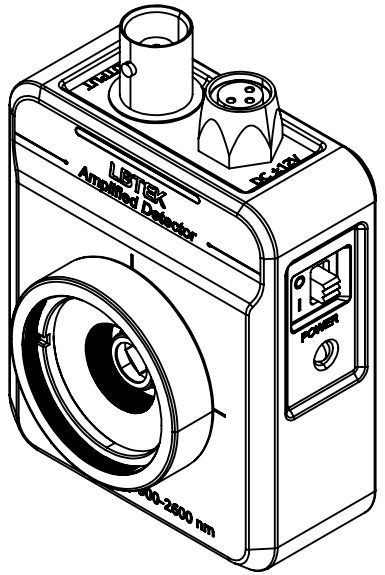

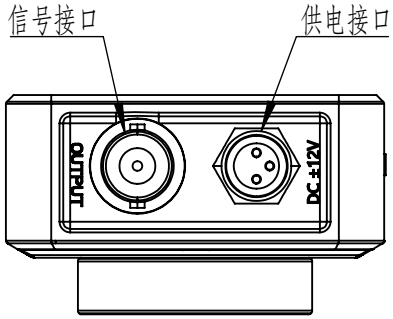

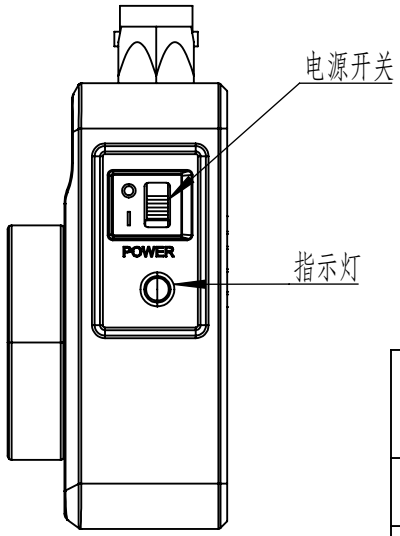

DRAWING PROJECTION			LBTEK			
	NAME	DATE	PDIN10-25M			
DRAWN	PNIU	APR./30th/25	Amplified Photodetector			
APPROVAL	EYANG	APR./30th/25	MATERIAL	WEIGHT	SCALE	REV
FOR INFORMATION ONLY NOT FOR MANUFACTURING PURPOSES				~1000g	1:1	A