

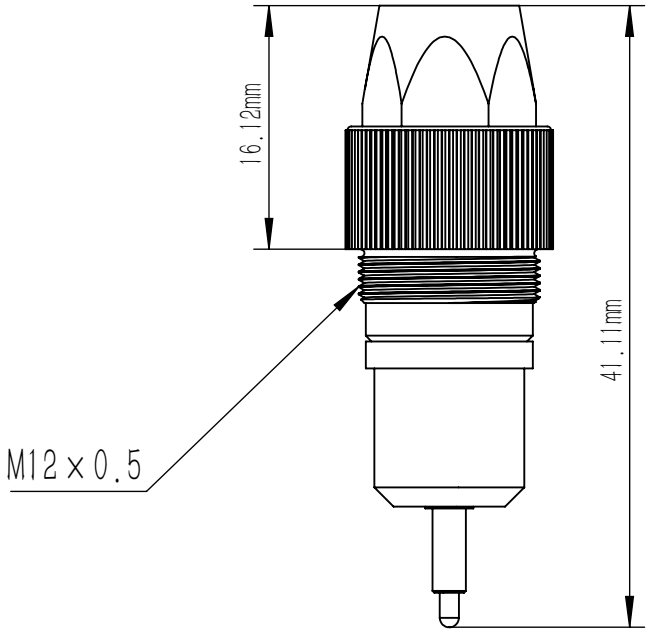

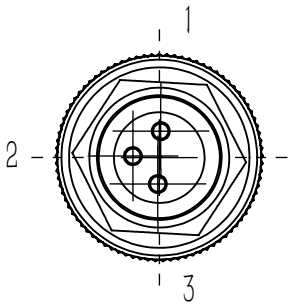

PIN 1:+12V
PIN 2:COMMON
PIN 3:−12V

DRAWING PROJECTION			LBTEK			
	NAME	DATE	DET2A			
DRAWN	BWANG	NOV./25th/25	Power adapter			
APPROVAL	ZWANG	NOV./25th/25	MATERIAL	WEIGHT	SCALE	REV
FOR INFORMATION ONLY NOT FOR MANUFACTURING PURPOSES				g	2:1	A