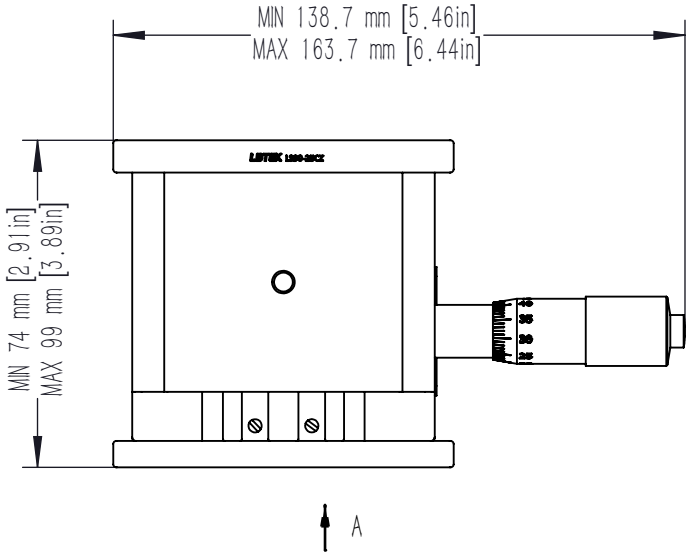

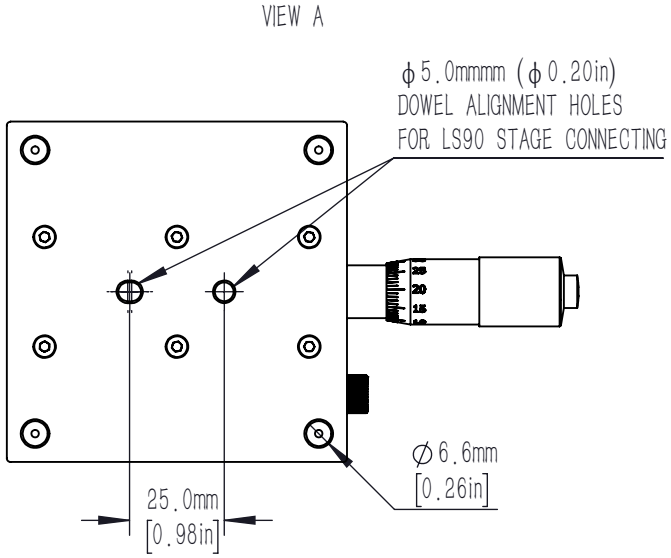

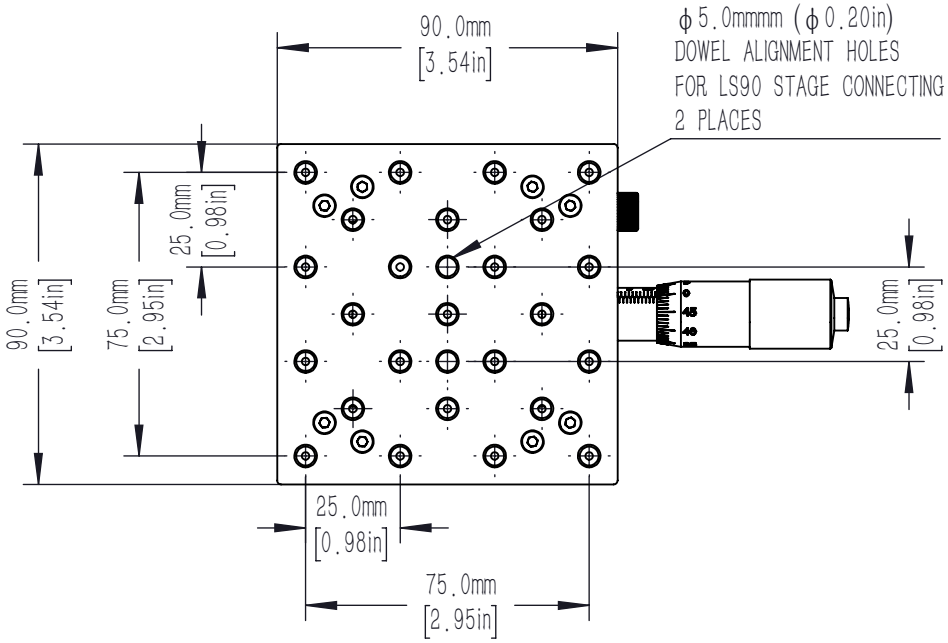

DRAWING PROJECTION			LBTEK			
	NAME	DATE	LS90–25CZ			
DRAWN	CZH	NOV./23rd/22	Z–AXIS LINEAR STAGE(25mm TRAVEL,90mm x 90mm)			
APPROVAL	ZXU	NOV./23rd/22	MATERIAL	WEIGHT	SCALE	REV
FOR INFORMATION ONLY NOT FOR MANUFACTURING PURPOSES			N/A	1.183 Kg	1:2	C