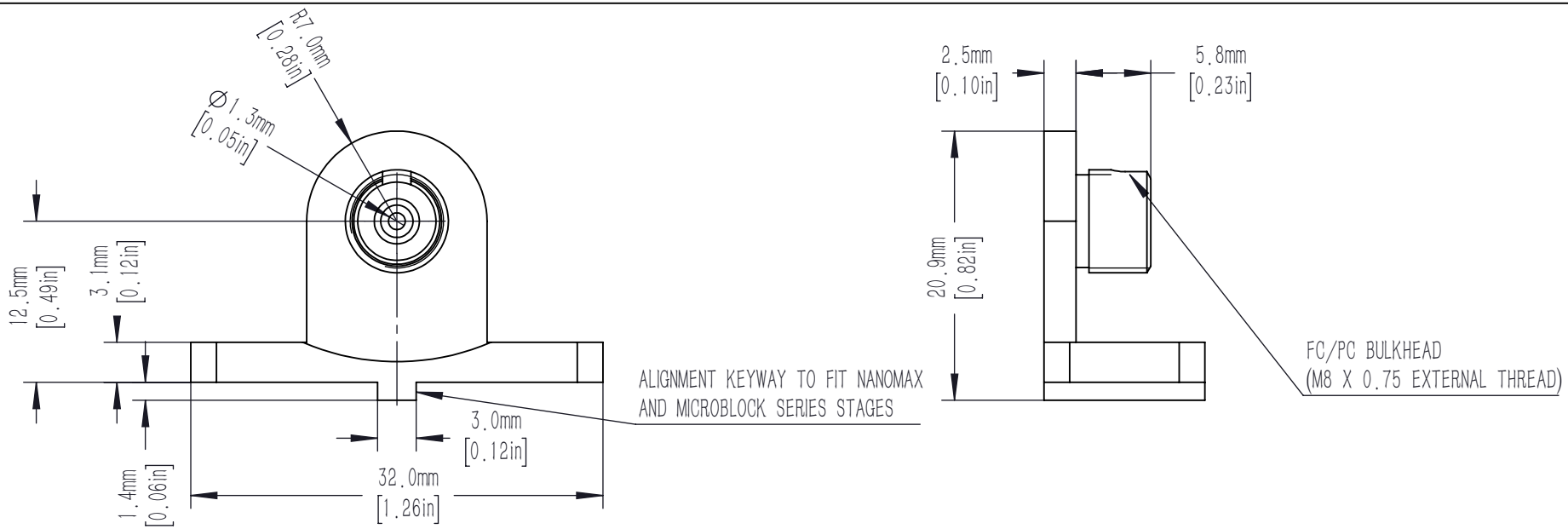

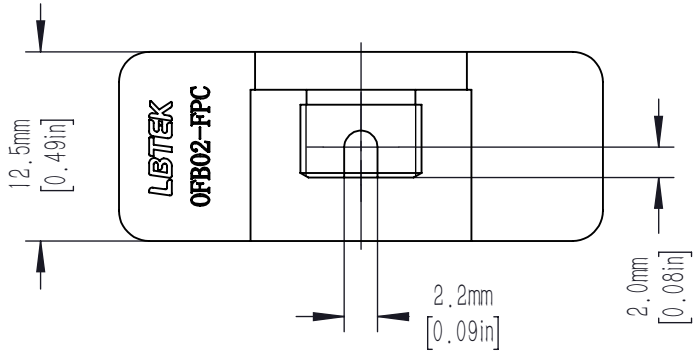

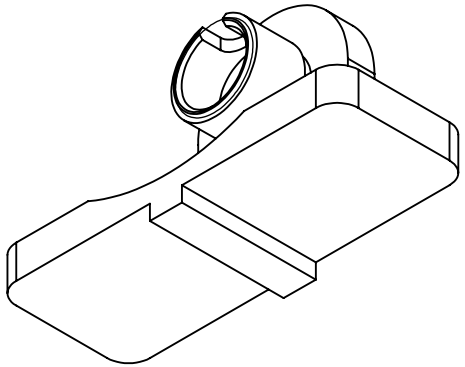

DRAWING PROJECTION			LBTEK			
	NAME	DATE	OFB02-FPC			
DRAWN	YWE	OCT./7th/23	OPTICAL FIBER BRACKET			
APPROVAL	ZXU	OCT./7th/23	MATERIAL	WEIGHT	SCALE	REV
FOR INFORMATION ONLY NOT FOR MANUFACTURING PURPOSES			N/A	0.014 Kg	2:1	B