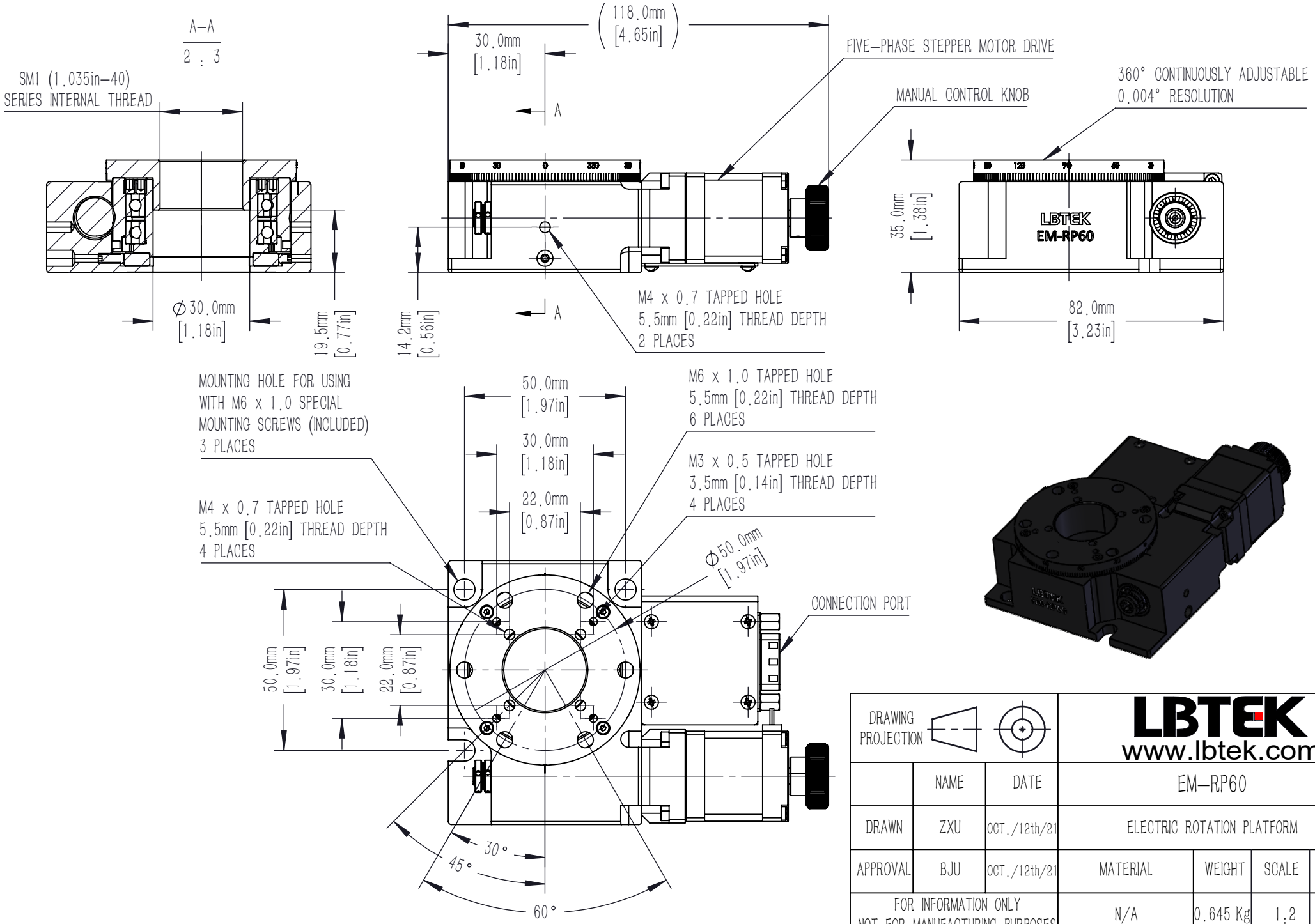

DRAWING PROJECTION			LBTEK www.lbtek.com			
	NAME	DATE	EM–RP60			
DRAWN	ZXU	OCT./12th/21	ELECTRIC ROTATION PLATFORM			
APPROVAL	BJU	OCT./12th/21	MATERIAL	WEIGHT	SCALE	REV
FOR INFORMATION ONLY NOT FOR MANUFACTURING PURPOSES			N/A	0.645 Kg	1:2	A