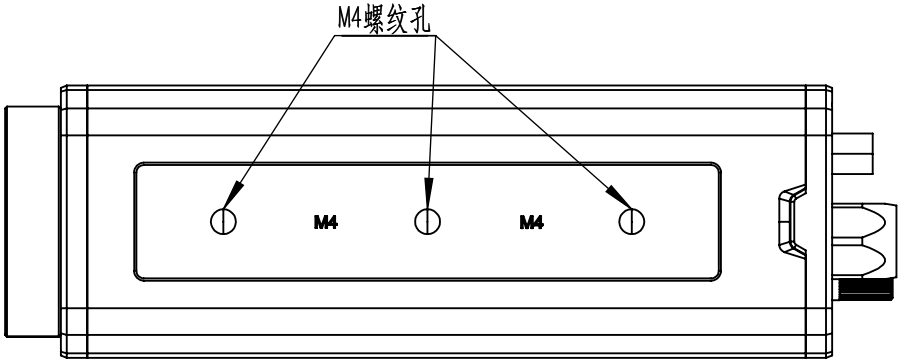

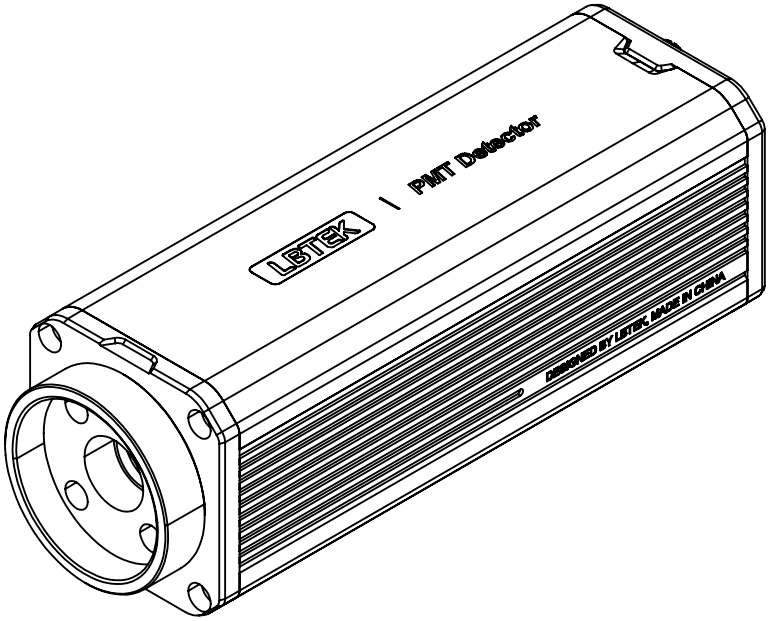

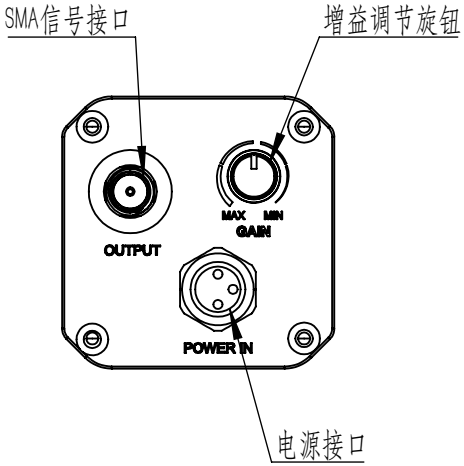

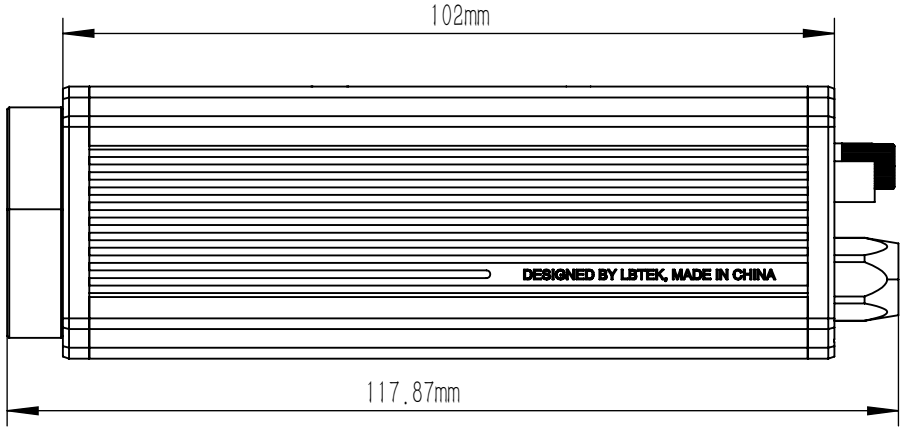

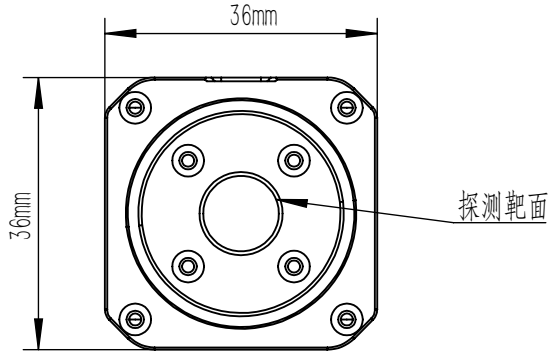

DRAWING PROJECTION			LBTEK			
	NAME	DATE	PMT-2370-10M			
DRAWN	PNIU	Aug./26th/26	Photomultiplier Tube			
APPROVAL	PNIU	Aug./26th/26	MATERIAL	WEIGHT	SCALE	REV
FOR INFORMATION ONLY NOT FOR MANUFACTURING PURPOSES				g	1:1	A