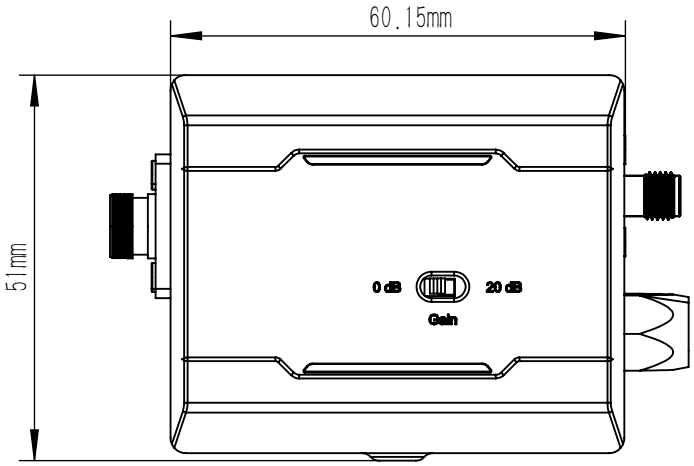

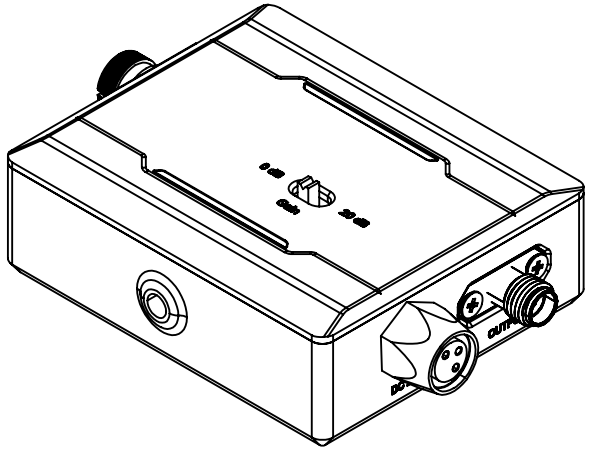

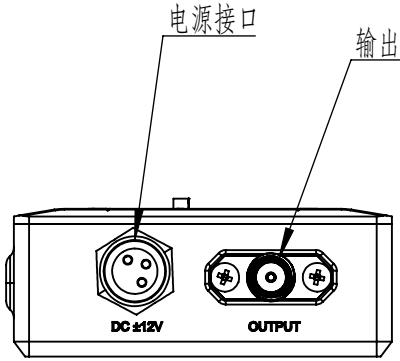

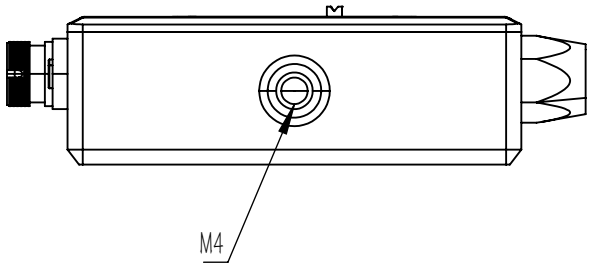

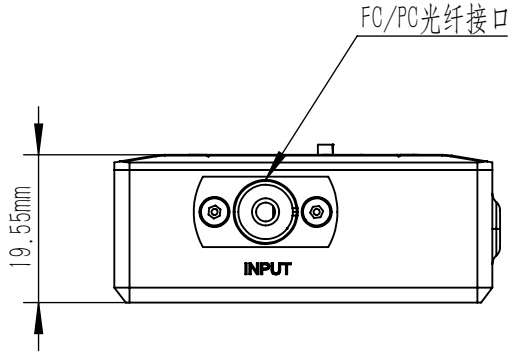

DRAWING PROJECTION			LBTEK			
	NAME	DATE	PDAS025-1.5G-PC			
DRAWN	PNIU	JUN./26th/26	High-speed amplification photodetector			
APPROVAL	ZHWANG	JUN./26th/26	MATERIAL	WEIGHT	SCALE	REV
FOR INFORMATION ONLY NOT FOR MANUFACTURING PURPOSES				g	1:1	A