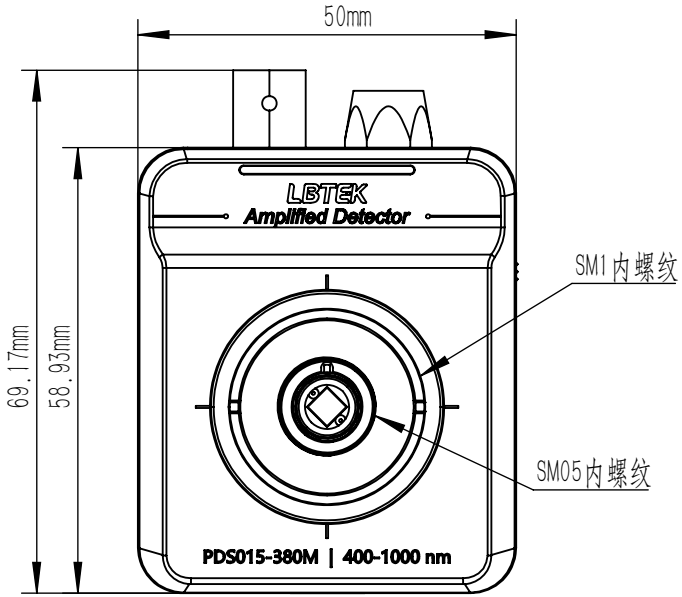


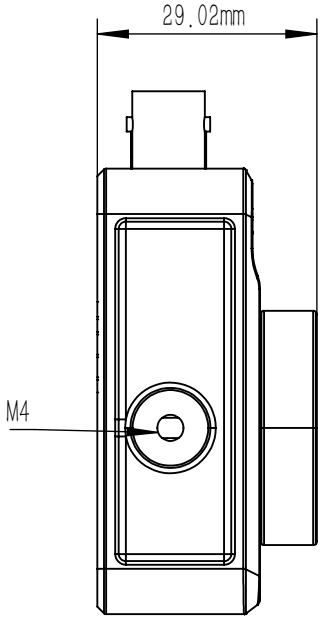


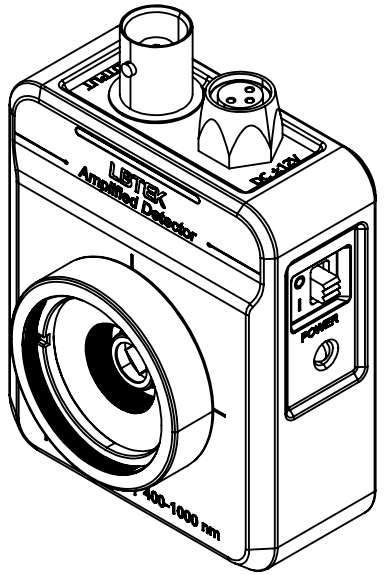


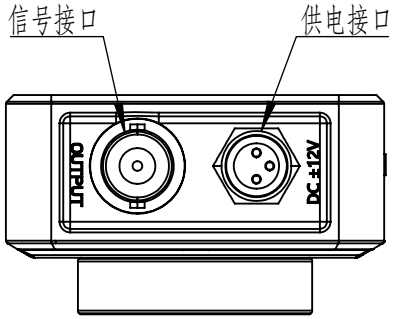


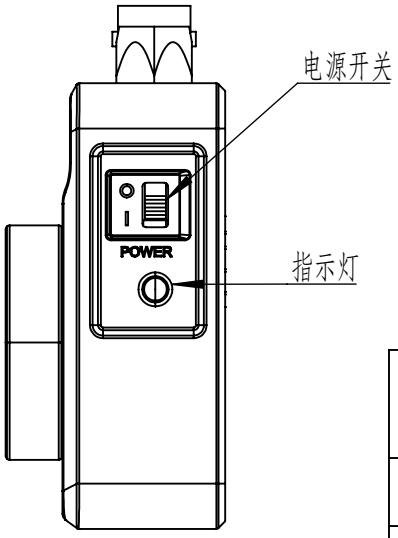


| | | | | | | |
|---|---|---|---|---|---|---|
| DRAWING PROJECTION | | | LBTEK | | | |
| | NAME | DATE | PDS015-380M | | | |
| DRAWN | PNIU | APR./30th/25 | Amplified Photodetector | | | |
| APPROVAL | EYANG | APR./30th/25 | MATERIAL | WEIGHT | SCALE | REV |
| FOR INFORMATION ONLY NOT FOR MANUFACTURING PURPOSES | | | | ~1000g | 1:1 | A |