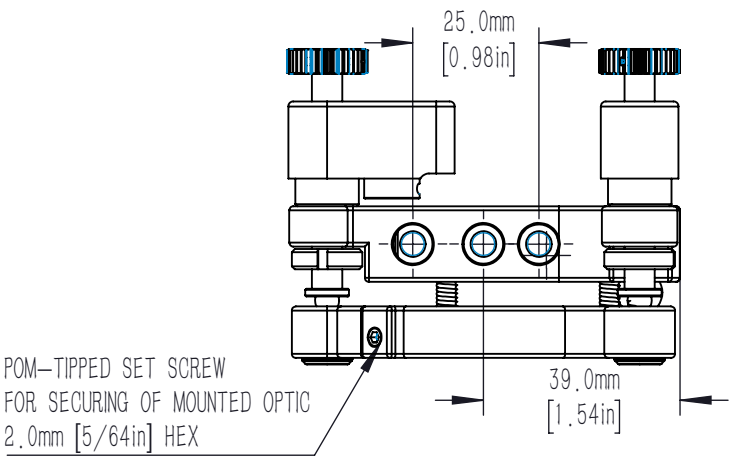

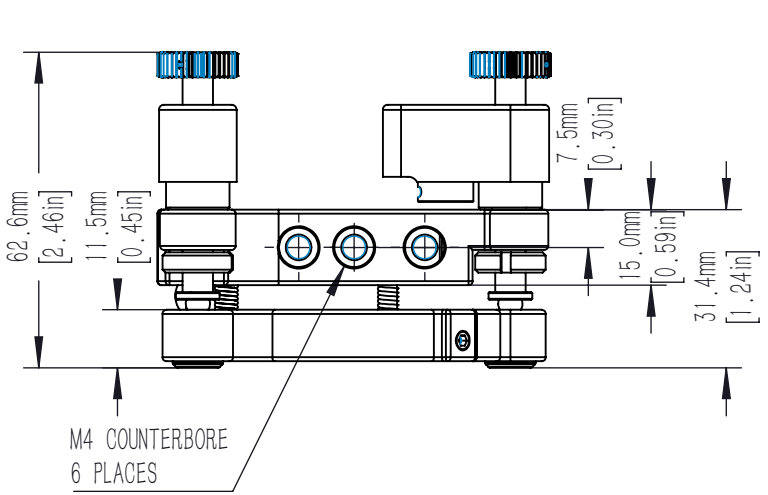

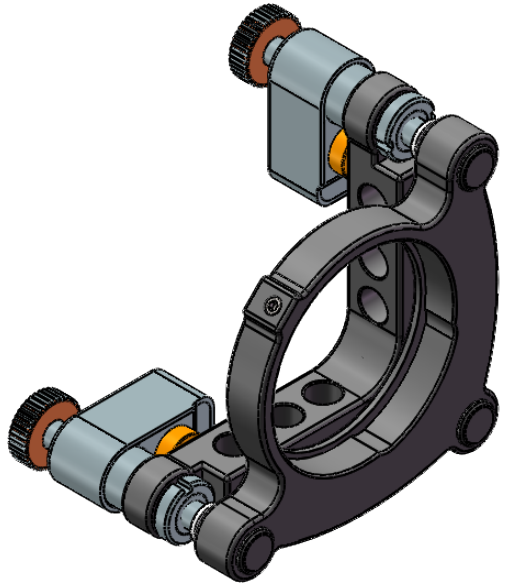

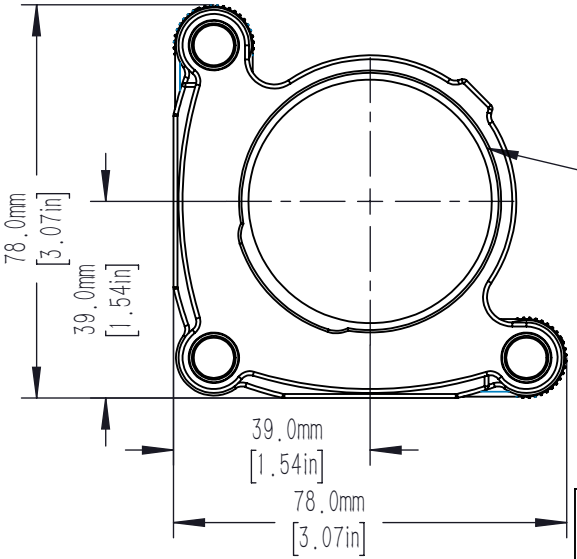

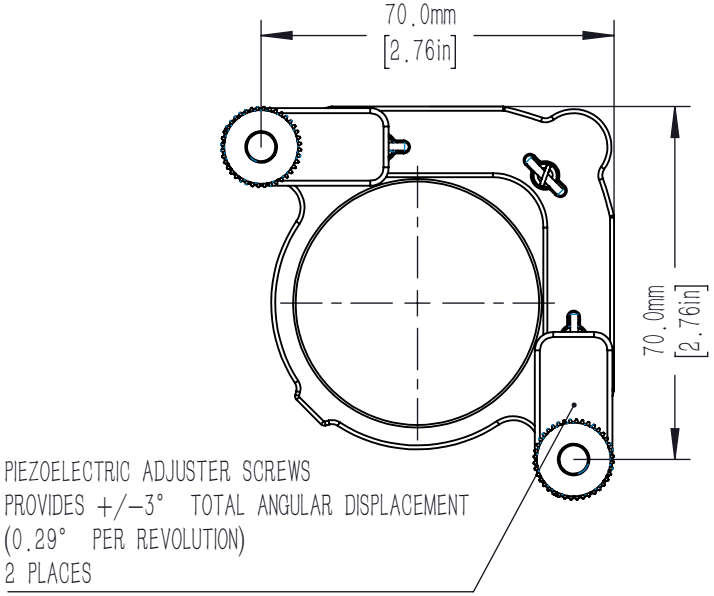

DRAWING PROJECTION			LBTEK			
	NAME	DATE	AMM-2B-E			
DRAWN	PCHEN	Mar./20th/26	PIEZOELECTRIC STANDARDS O-TYPE REFLECTOR FRAME ϕ50.8mm OPTICS			
APPROVAL	YHLI	Mar./20th/26	MATERIAL	WEIGHT	SCALE	REV
FOR INFORMATION ONLY NOT FOR MANUFACTURING PURPOSES			N/A	0.298 Kg	1:1.5	A