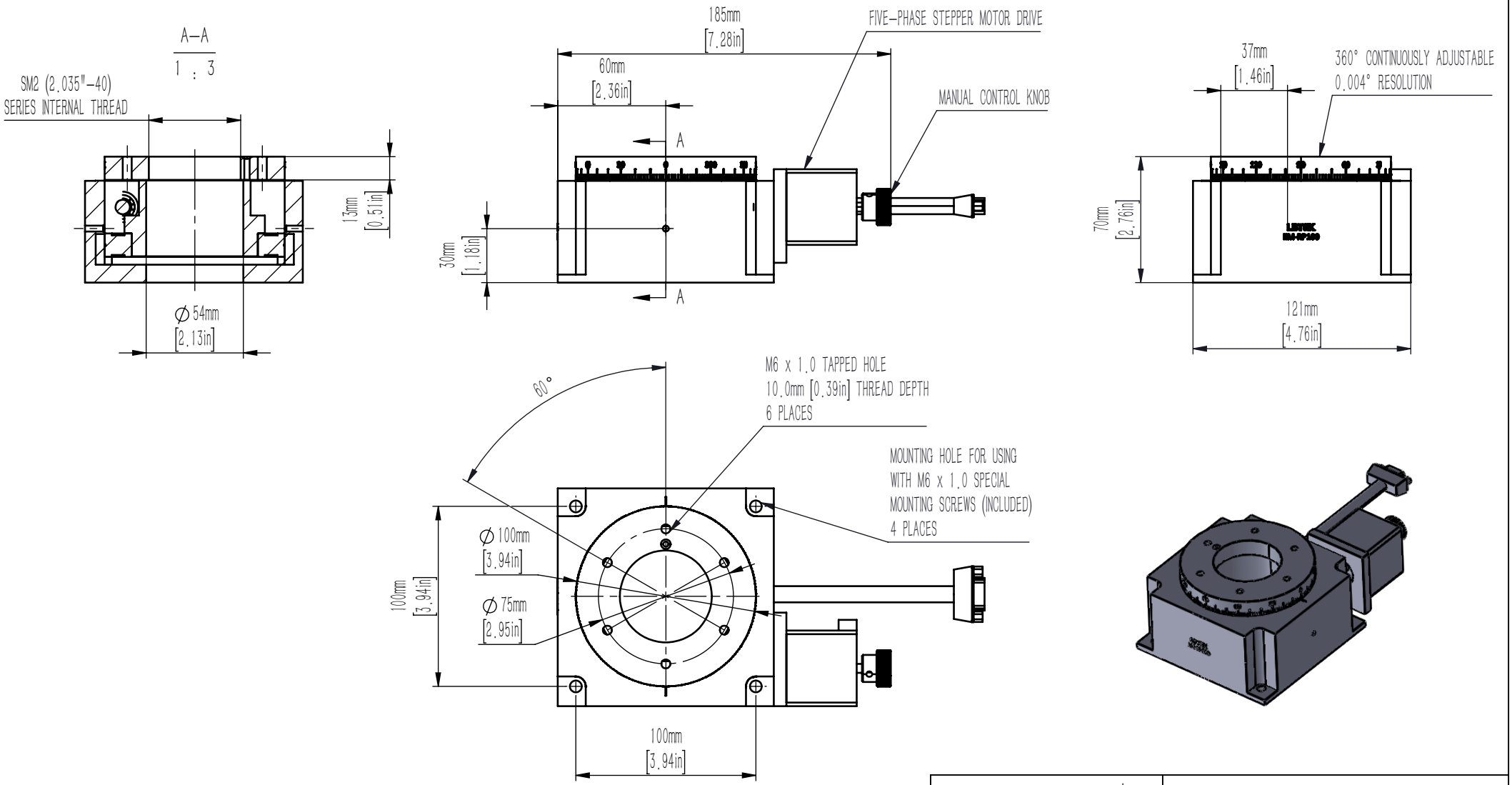

DRAWING PROJECTION			LBTEK			
	NAME	DATE	EM–RP100			
DRAWN	ZXU	NOV./10th/22	ELECTRIC ROTATION PLATFORM			
APPROVAL	BJU	NOV./10th/22	MATERIAL	WEIGHT	SCALE	REV
FOR INFORMATION ONLY NOT FOR MANUFACTURING PURPOSES			N/A	3Kg	1:2	A