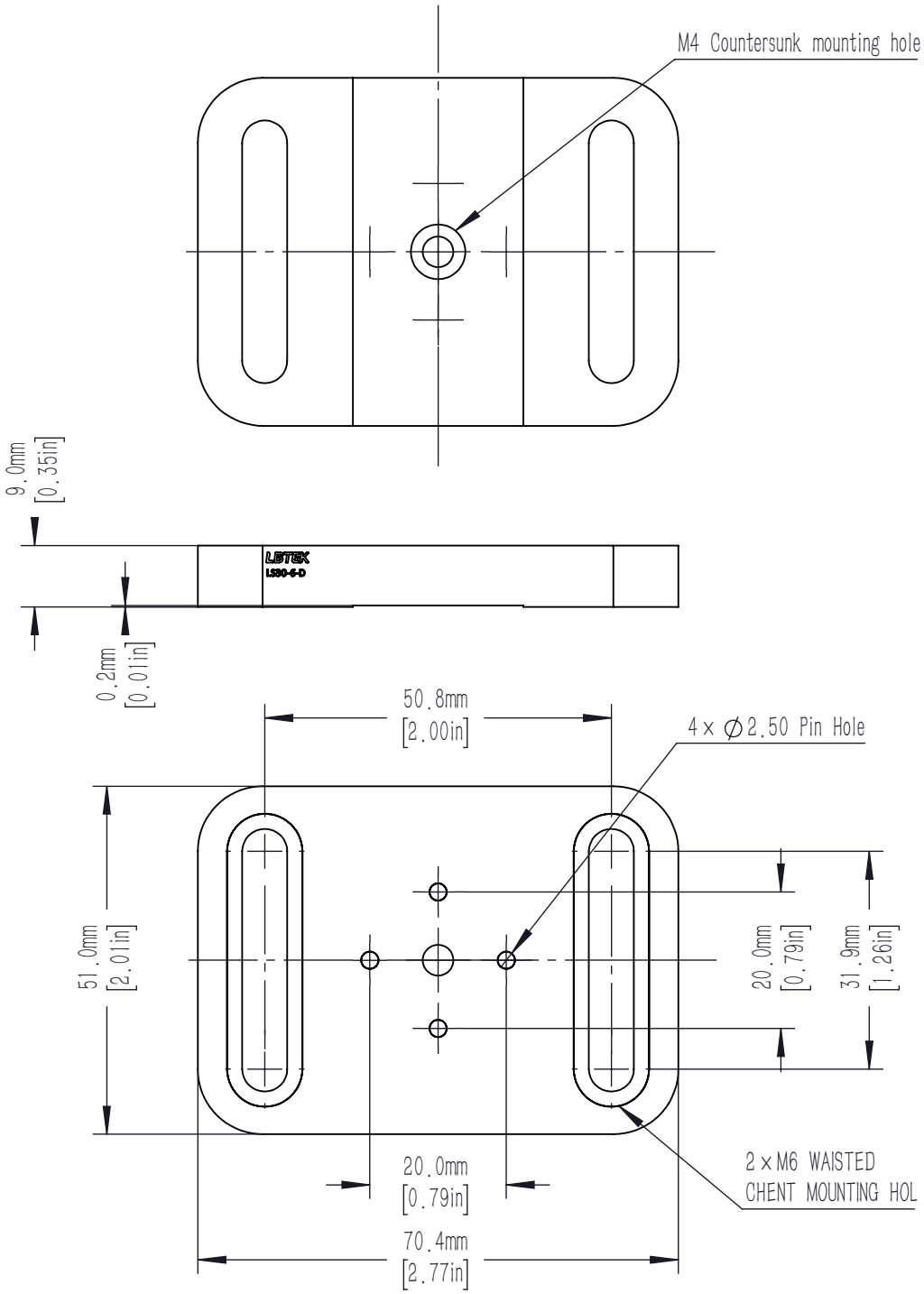

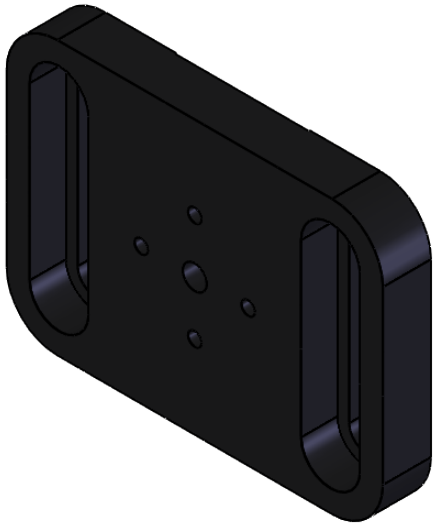

DRAWING PROJECTION			LBTEK			
	NAME	DATE	LS30-6-D			
DRAWN	HYB	MAR./6th/20	MS Series Displacement Stage Adapter Plate			
APPROVAL	LYH	MAR./6th/20	MATERIAL	WEIGHT	SCALE	REV
FOR INFORMATION ONLY NOT FOR MANUFACTURING PURPOSES			N/A	0.064 Kg	1:1	A