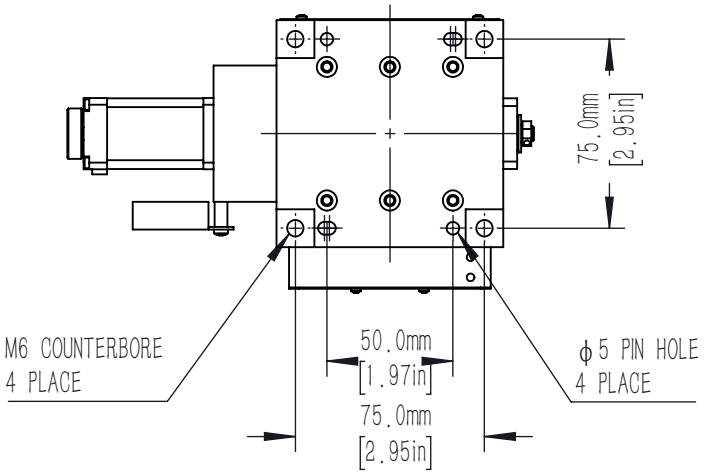

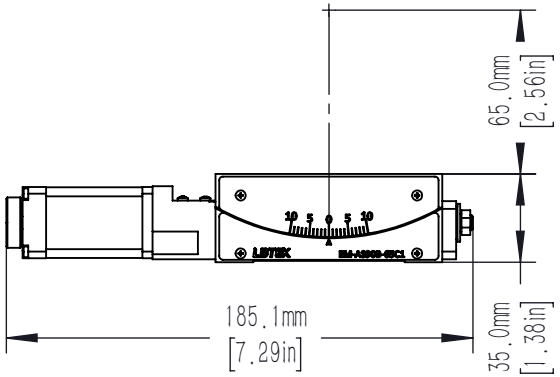

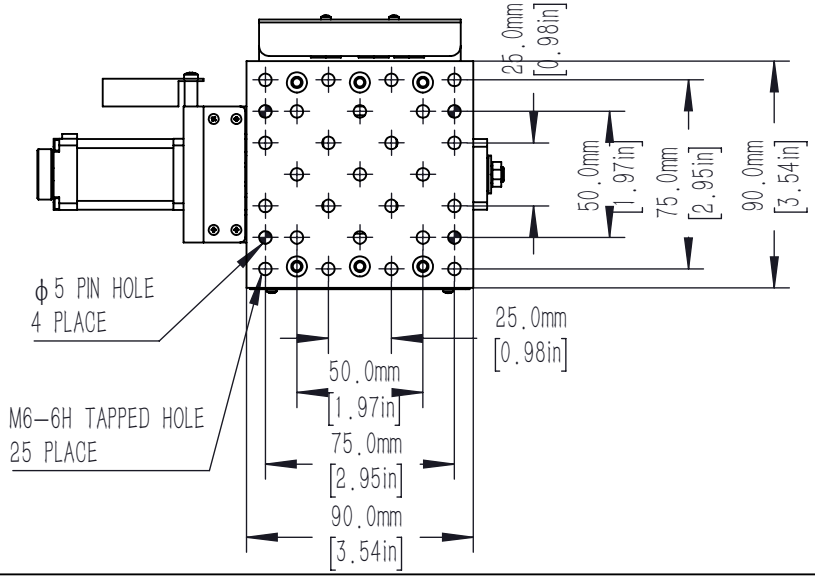

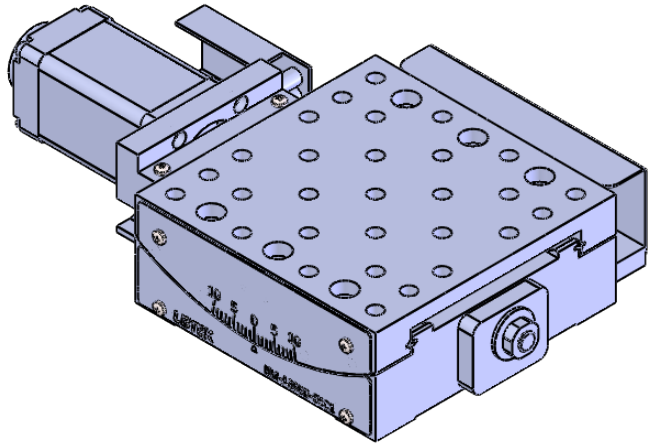

DRAWING PROJECTION			LBTEK			
	NAME	DATE	EM–AS90B–65C1			
DRAWN	ZLI	AUG./20th/24	ELECTRIC ANGLE STAGE			
APPROVAL	YLI	AUG./20th/24	MATERIAL	WEIGHT	SCALE	REV
FOR INFORMATION ONLY NOT FOR MANUFACTURING PURPOSES			N/A	1.17 Kg	1:3	A