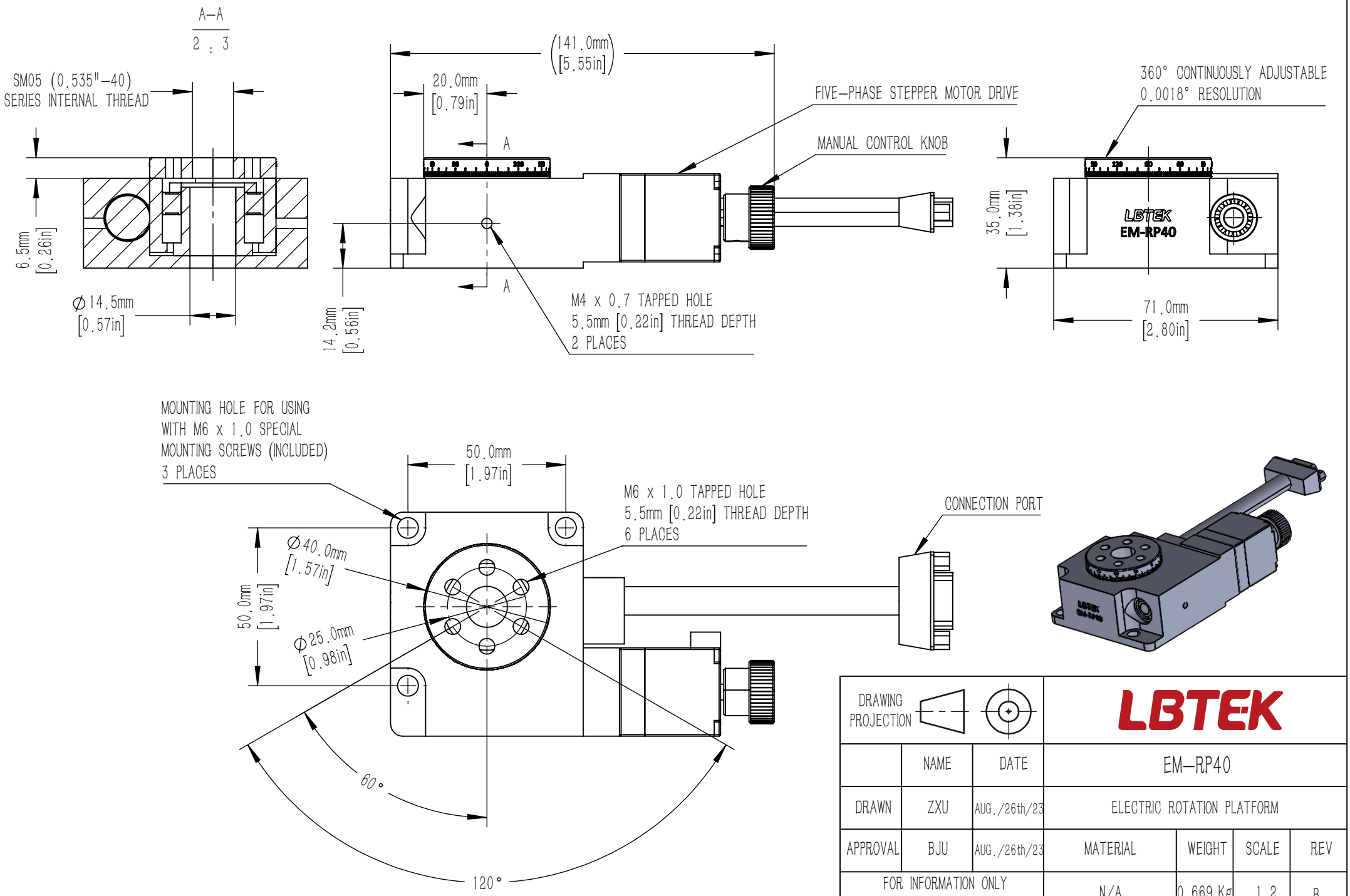

DRAWING PROJECTION			LBTEK			
	NAME	DATE	EM–RP40			
DRAWN	ZXU	AUG./26th/23	ELECTRIC ROTATION PLATFORM			
APPROVAL	BJU	AUG./26th/23	MATERIAL	WEIGHT	SCALE	REV
FOR INFORMATION ONLY NOT FOR MANUFACTURING PURPOSES			N/A	0.669 Kg	1:2	B