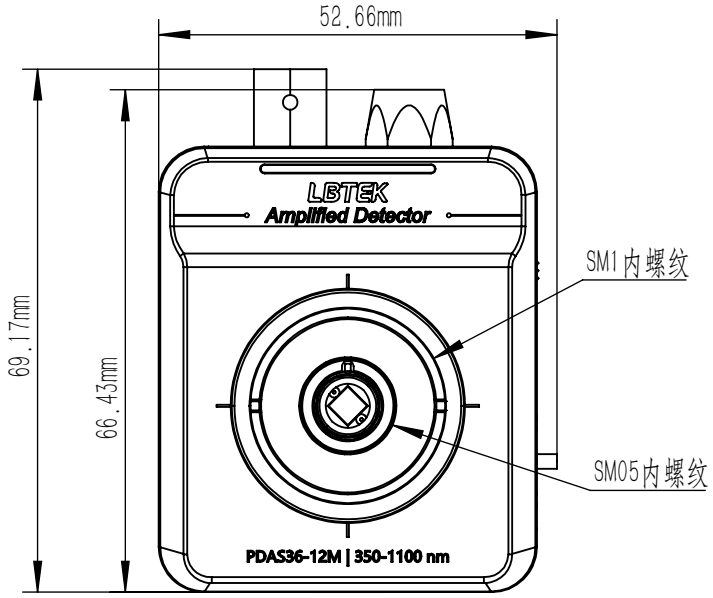

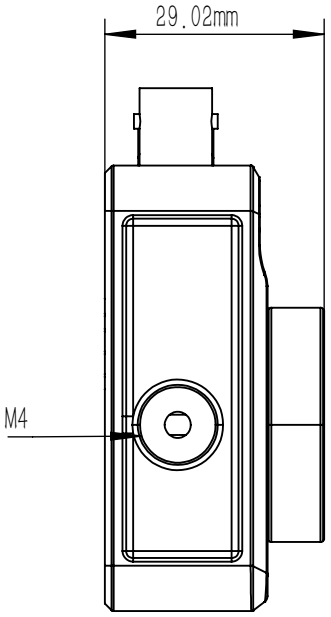

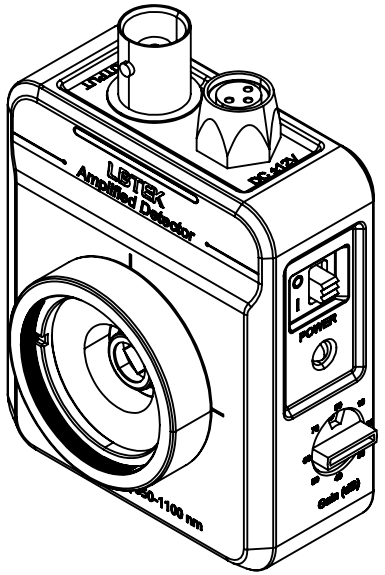

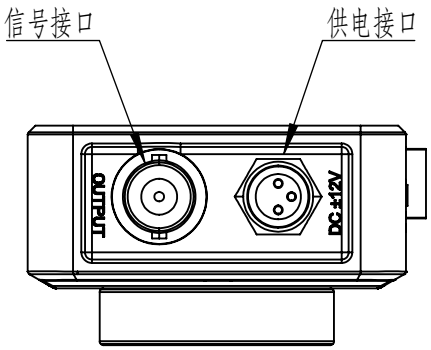

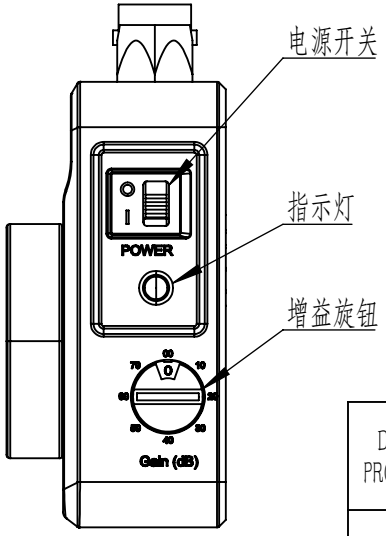

DRAWING PROJECTION			LBTEK			
	NAME	DATE	PDAS36-12M			
DRAWN	PNIU	MAY/6th/25	Amplified Photodetector			
APPROVAL	EYANG	MAY/6th/25	MATERIAL	WEIGHT	SCALE	REV
FOR INFORMATION ONLY NOT FOR MANUFACTURING PURPOSES				~1000 g	1:1	A