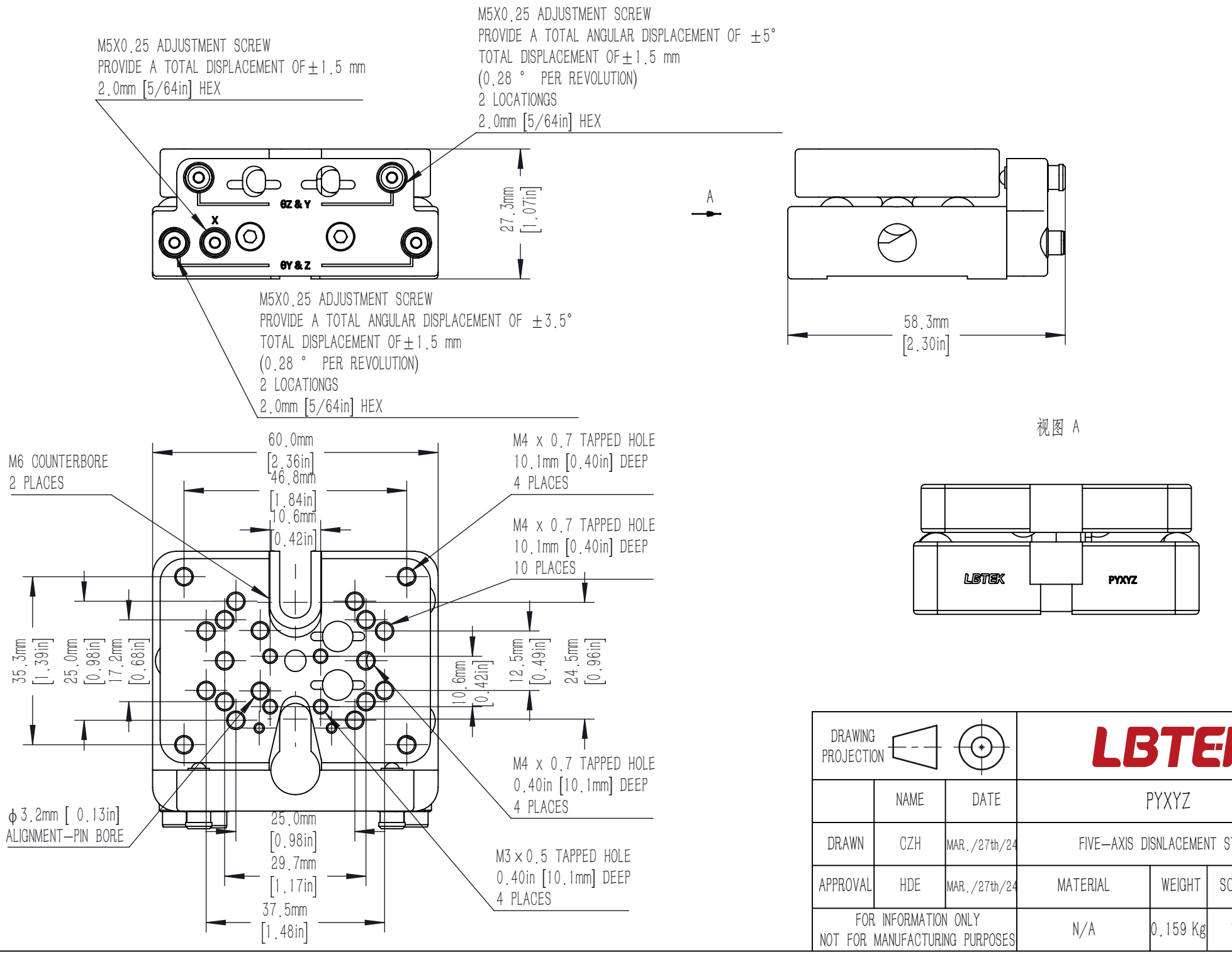

DRAWING PROJECTION			LBTEK			
	NAME	DATE	PYXYZ			
DRAWN	CZH	MAR./27th/24	FIVE-AXIS DISNLACEMENT STAGE			
APPROVAL	HDE	MAR./27th/24	MATERIAL	WEIGHT	SCALE	REV
FOR INFORMATION ONLY NOT FOR MANUFACTURING PURPOSES			N/A	0.159 Kg	1:1	A