

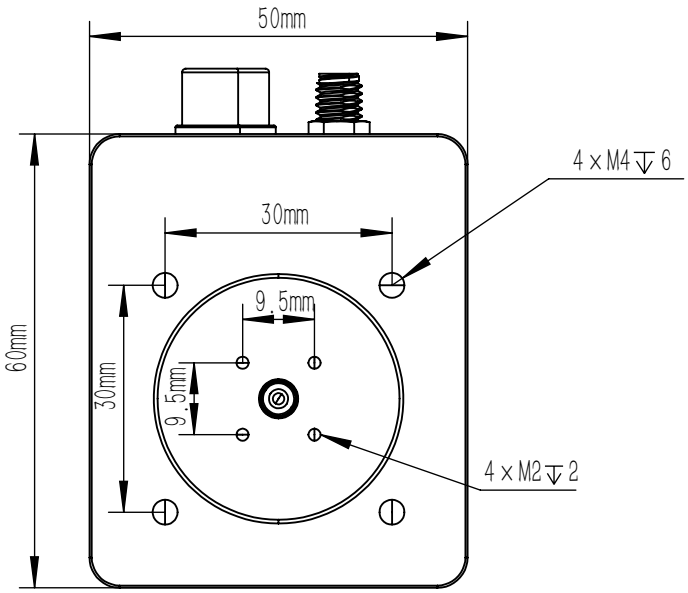

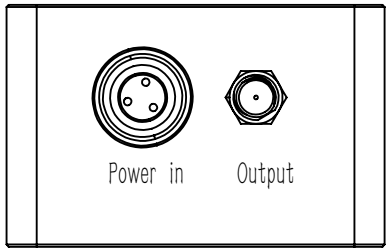

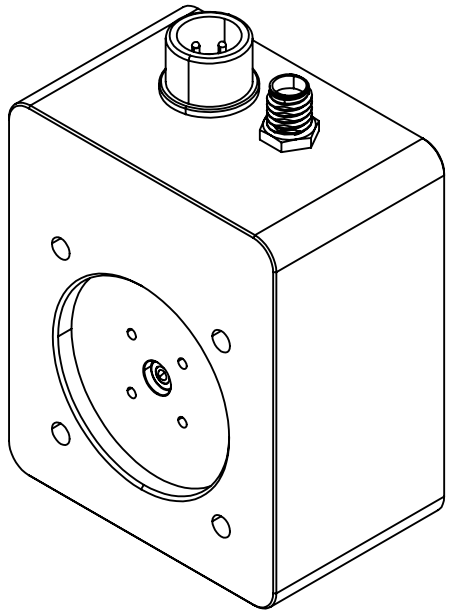

DRAWING PROJECTION			LBTEK			
	NAME	DATE	APD-S01A			
DRAWN	PNIU	JAN./15th/26	Avalanche Photodetector			
APPROVAL	ZHWANG	JAN./15th/26	MATERIAL	WEIGHT	SCALE	REV
FOR INFORMATION ONLY NOT FOR MANUFACTURING PURPOSES				g	1:1	A