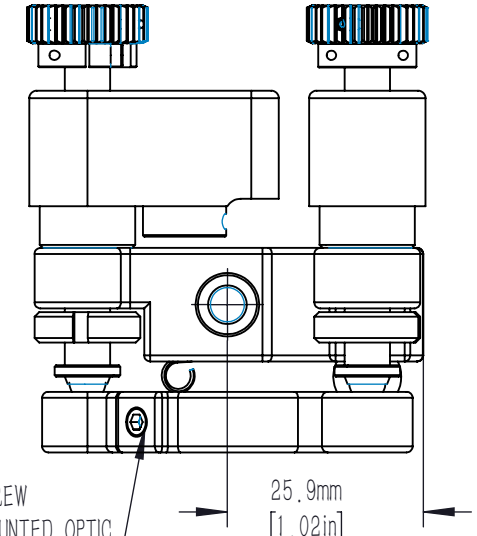

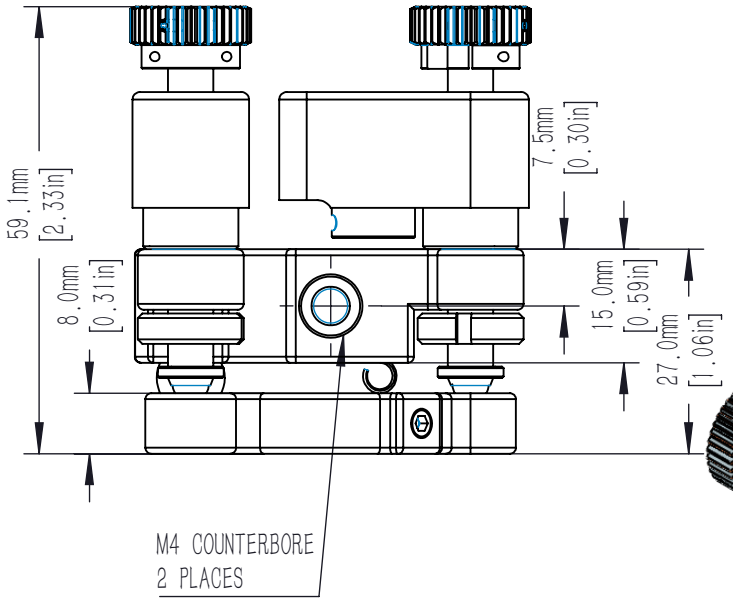

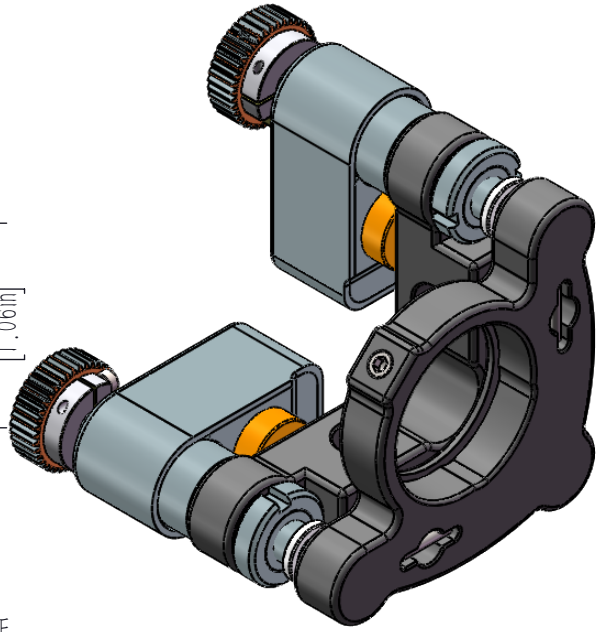

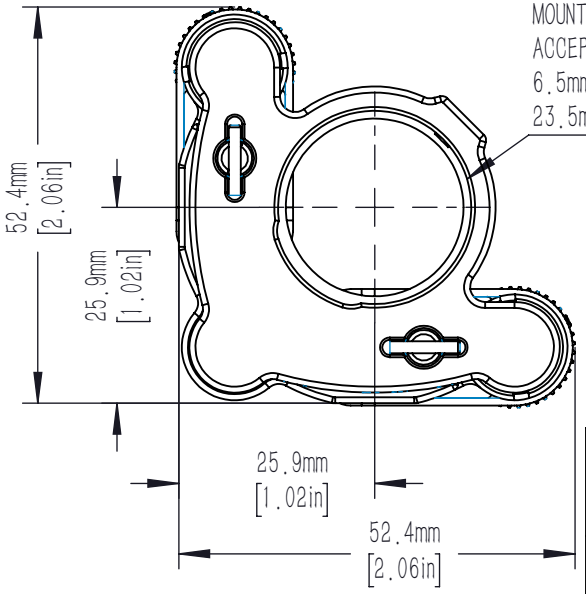

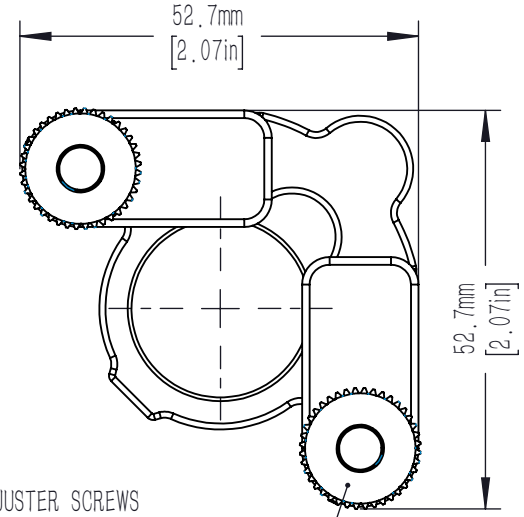

DRAWING PROJECTION			LBTEK			
	NAME	DATE	AMM–1B–E			
DRAWN	PCHEN	Mar./20th/26	PIEZOELECTRIC STANDARDS O–TYPE REFLECTOR FRAME ϕ25.4mm OPTICS			
APPROVAL	YHLI	Mar./20th/26	MATERIAL	WEIGHT	SCALE	REV
FOR INFORMATION ONLY NOT FOR MANUFACTURING PURPOSES			N/A	0.199 Kg	1:1	A