LBTEK

LBDD-9-125-60系列
电控可调光纤衰减器

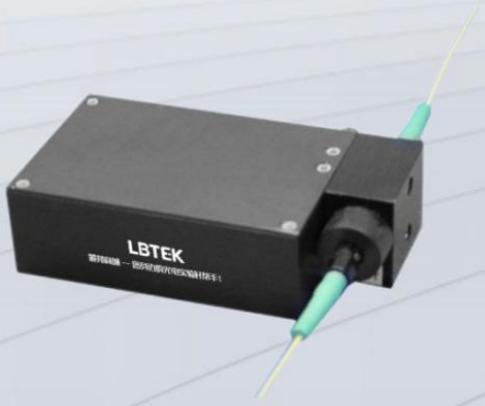

用户使用手册

Warning!	Clean the fiber optic connectors, receptacles, and adaptors *each time* before attaching cables to the instrument. Damage caused by the use of dirty connectors is not covered under warranty.
	The most common problem with fiber optic test equipment is damage caused when dirty fibers are connected to the system. Dirty components (fiber connectors, receptacles, or adaptors) can degrade performance of the instrument or cause physical damage, resulting in costly repairs. To prevent damage: Always use end caps and receptacle covers. These are provided with the instrument and help block air-borne contaminants. It is the responsibility of the operator to ensure that optical connectors, receptacles, and adaptors are properly cleaned *each time* before they are connected. Use materials that are specifically designed to clean optical fibers, connectors and adaptors and refer to the *Maintenance and Service* section of this document.

LBTEK

INTRODUCTION

The LBTEK Optics family of electrically controlled, variable fiber optic attenuators has several models, each with distinct features and benefits. All models are available with single-mode, multimode, or polarization-maintaining fiber. The LBDD attenuators provides versatility and accuracy in a wide range of applications.

Figure 1 shows the motor-driven LBDD Variable Fiber Optic Attenuator. The LBDD is configured with the fibers in a straight line.



Figure 1: LBDD, with In-Line Configuration

The degree of attenuation is controlled with an internal stepper motor that is geared to give a balance of speed and precision. The versatile design allows each unit to be custom-built and calibrated to address the specific requirements of a user-defined fiber optic system.

This design is polarization-insensitive and generates negligible back-reflection. The built-in calibration data accurately defines intermediate degrees of attenuation between no blocking and full blocking.

An optical “home” sensor allows the user to position the optical elements in a known reference position. A known reference allows repeatable positioning of the attenuator to a specific step position.

The attenuator can be stepped within a range of 0 to 24000 steps. A step count of zero represents the home position. When decreasing the step count, the unit will not step to a count below zero. Also, it will not step beyond the maximum step count of 24,000. For a 485:1 gear ratio and 48 steps per revolution of the motor, the entire range of the attenuator is covered by approximately 11640 steps.

When a single-mode attenuator is required, a blocking device is generally used for attenuation. When a multimode attenuator is required, a variable neutral density filter is usually used. For applications using large core multimode fiber (greater than 100 microns) and for high power applications, a blocking technique is generally more suitable.

Key Features

- Stepper motor-driven
- Source-to-fiber and fiber-to-fiber versions available
- Available for all fiber types: SM, MM, or PM
- Flat wavelength response
- Wide wavelength range, wide attenuation range
- High power handling
- High resolution
- Low insertion loss, low backreflection
- Cost efficient
- Multiple calibration wavelengths are available

Applications

Some applications for which the standard model attenuators can be used are:

- Active gain equalization in dense wavelength-division multiplexing systems (DWDM)
- Bit error rate testing
- Troubleshooting receivers and other active fiber optic components
- Designing fiber optic transmitter and receiver circuitry
- Checking and setting power and power meter linearity

Parts and Accessories

The standard model attenuator includes:

- LBDD Variable Fiber Optic Attenuator
- Communications cable
- RJ-11 to DB-9 adaptor
- Operating Instructions (this document)
- Certificate of Compliance

Product Description

This section briefly describes the LBDD attenuators and the components that can be used with them. User access and control is identical to that of the LBDD.

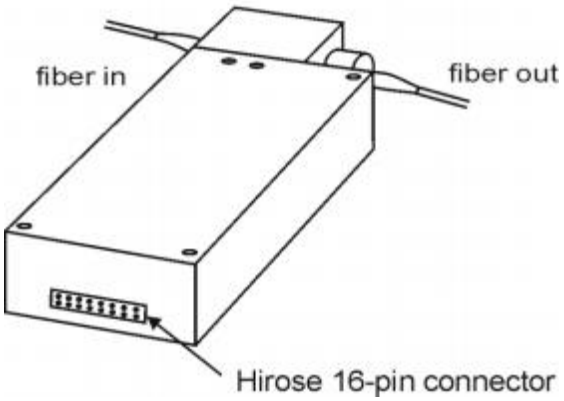

Figure 2: LBDD In-Line attenuator

The LBDD is microprocessor-controlled, motor-driven variable fiber optic attenuators that come as calibrated units, complete with attached fiber optic pigtails. The devices feature built- in calibration data and an embedded microprocessor for executing attenuation commands. The microprocessor interprets commands to control the drive circuit, and the drive circuit controls the operation of the stepper motor. The built-in RS-232 interface enables direct computer control by a host processor. The device is configured with customer- specified optical connectors. Both versions of the device are provided in aluminum housing.

User access and control is through a 16-pin Hirose[1] connector and a communications cable. The attenuator is configured for RS-232 communications protocols. The device responds to RS- 232 (maximum ±25 V) signals. See the **Specifications** and **Installation** sections of this document for the wiring specifications of the connector.

Communications Cable

The communications cable for the attenuator is terminated on one end with an RJ-11 plug. The plug is connected to the RJ-11/DB-9 adaptor. The other end of the cable is terminated with a mating connector and crimped wires for the power supply. Other crimped wires can be bundled with the cable. The **Installation** and **Communications** sections of this document describe the connections.

RJ-11 to DB-9 Adaptor

The RJ-11/DB-9 adaptor connects the RJ-11 plug of the serial interface communications cable to a DB-9 COM port on a PC.

Documentation

- The **Variable Fiber Optic Attenuator Operating Instructions** (this document) describe the physical and optical characteristics, installation, and operation of the device. Instructions to establish RS-232 communications are also included.

[1] Hirose is Hirose Electric U.S.A.
[2] SPI is a trademark of Motorola, Inc.

Theory of Operation

To control the intensity of light in the system, an attenuator is placed in the optical path. The simplest type of attenuator is fixed, whereby it reduces the intensity of light by a set amount. Ideally, the attenuator is wavelength-insensitive and absorbs light to the same degree, regardless of wavelength. For specific applications, a change to the spectral profile, where an optical filter selectively transmits some wavelengths while absorbing the rest, is desirable. The LBDD family of attenuators provides quantified and controlled variable attenuation in many applications.

The intensity of light (power, P, in Watts) can vary over several orders of magnitude. At high power, the sensitive photodetector of an optical power meter can become saturated, which leads to damage or a loss of accuracy. A variable attenuator is used to avoid this problem or to set an optical system to a known power level.

To describe wide variations in power, a relative logarithmic scale can be used: $P(dB) = 10\log(P_{OUT}/P_{IN})$

A negative value ($P_{OUT}<P_{IN}$) indicates a loss of power and can be correlated with a scale that shows the transmission percentage (from 100% to 0%).

Some significant correlated values are listed in Table 1.

Table 1: Loss and Transmission Rates

dB	Transmission (%)	dB	Transmission (%)
0	100	-10	10
-0.01	99.8	-20	1.0
-0.10	99.7	-30	0.1
-1.00	79.4	-40	0.01
-3.01	50	-50	0.001
-5	31.6	-60	0.0001

As a component of a fiber optic system that uses single-mode or polarization-maintaining fiber, the LBDD attenuators is designed with a blocking ferrule that moves step-wise into the optical path. Two conditions are defined well: no blocking and full blocking.

The attenuator can drive to full optical power, fix the attenuation at a known intermediate level, or gradually drive to the limit of detection of the power measurement system. The built-in calibration data accurately defines intermediate degrees of attenuation.

Known attenuation levels are significant for bit error rate testing, simulating optical link budgets, and designing optical receiver front-ends. The attenuator can also be used to test the linear response of a questionable optical power meter or to calibrate one power meter with another.

Attenuation Methods

The DD family of attenuators incorporates either the blocking-type or variable neutral density filter-type attenuator mechanism, with a micro-controller to provide the intelligence. The blocking techniques allow for high-speed, high-resolution attenuation under digital stepper motor control. Attenuators with single mode or polarization maintaining fibers generally use the blocking type method. The multimode LBDD family uses a variable neutral density filter.

The attenuator is calibrated for a specific wavelength or multiple wavelengths; the most accurate results are obtained when the device is used with these wavelengths.

Blocking Type Attenuator

In single-mode and polarization-maintaining fiber applications, the blocking type attenuator is used. The blocking technique allows for high-speed, high-resolution attenuation under digital stepper motor control. The LBDD attenuator is calibrated for one or more specific wavelengths.

Light from the source, after passing through the input fiber, is collimated into a beam diameter of approximately 0.4 to 0.6 mm, within a wavelength range of 400 to1625 nm. The width of the beam depends on the lens, wavelength, and numerical aperture of the fiber. A blocking device, as shown in Figure 3, is inserted into the beam of collimated light to attain the attenuation required. As the stepping motor rotates, the blocking rod is slowly moved into the light path. When the attenuation is at its minimum, there may be a region where the stepping motor takes a number of steps without any change in attenuation. This is normal. It occurs while the blocking rod is moving towards the light beam, but before it actually starts to block the light. This is shown in the region from A to B in the following figure. As the stepping motor continues to rotate, the blocking rod enters the light beam, attenuating the strength of the optical signal. This corresponds to region C in the figure. Eventually, the light will be completely blocked, as shown in region D. Generally, the attenuator will be operated from region B to region D. However, if one continues to step beyond region D, the blocking rod may exit on the far side of the light beam, and the attenuation may be reduced with additional steps, even though steps in this direction previously increased the attenuation. This is shown in region E.

If attenuation commands are used for setting the attenuation level, the built-in calibration table will ensure that the device does not operate in region E. If one uses the step commands to change the attenuator position, then it is quite easy to enter region E, if one steps continuously in the same direction. It is important to understand this operation in order to avoid unexpected results.

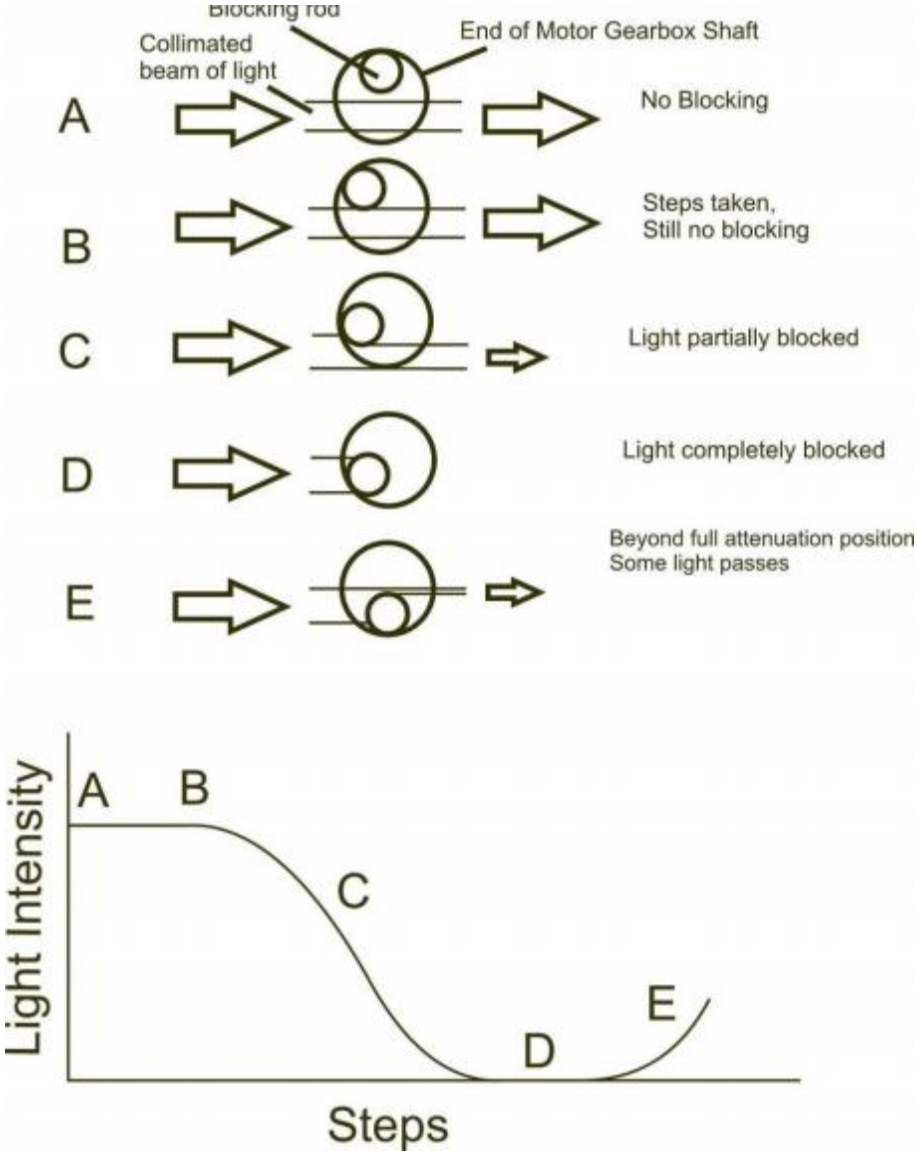

Figure 3: Blocking Attenuator for Singlemode Operation

A precision stepper motor, through a reduction gear assembly, controls the blocking device. The motor drives a given number of steps from the home position to position the blocking device to intersect the beam.

Neutral Density Filter Type Attenuator

In multimode fiber applications, the variable neutral density filter attenuator is used. A neutral density filter, shown in Figure 4, with attenuation that varies from 0.0 dB (neglecting insertion loss) to over 40 dB, is inserted into the beam of collimated light. The position of the filter within the beam determines the level of attenuation.

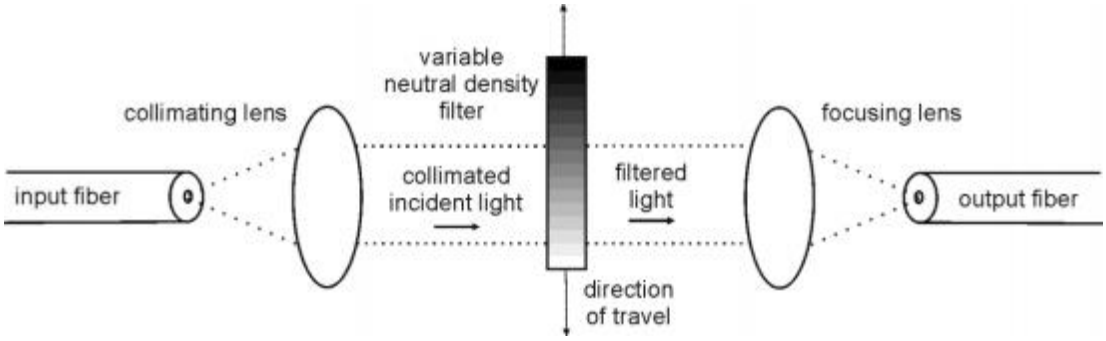

Figure 4: Neutral Density Filter for Multimode Operation

Stepper Motor

A chopper circuit drives the stepper motor electrically. When one step is 1/48 of a full motor revolution, the step corresponds to 7.5 degrees of motor rotation. The customer selects the gear ratio of the motor but, for example, with a 485:1 reduction gear attached to the stepper motor,

the step represents 0.01546 degrees of rotation (that is, 7.5。/485). There is a slot through the motor shaft that determines the step-zero home position. A light-emitting diode is placed on one side of the slot and a photodetector is on the other side. The photodetector is used in high-gain mode so that the electric output represents either the home position (light through) or a rotated shaft (the absence of light).

Accuracy

Accuracy is a measure of how well a unit maintains attenuation at any given step. The attenuation can vary as a result of many factors; for example, when the optical components vary in response to changing temperature and relative humidity, the attenuation can change. The quoted specifications indicate statistically that 99 out of 100 units stay within range. The error on power readings (calculated at a 4σ, 99% level of confidence) varies with attenuation.

Calibration

Each attenuator is calibrated individually. Refer to the Certificate of Compliance for specific values, which include the measured insertion loss at each calibrated wavelength, the calibration date, and the serial number of the device.

Connections

Each attenuator is configured with the optical connectors that are specified by the customer. A wide range of standard optical connectors is compatible with the device.

Safety

Although the variable fiber optic attenuator is not a light source, caution is required with systems that use light and laser sources. Some sources have significant optical power of a specific wavelength, concentrated into a very narrow beam. Such a beam can travel great distances without dispersion and reflect into unanticipated spaces. The eye cannot detect an infrared source; therefore, the eyelid does not close to avoid exposure.

Read, and follow, the appropriate laser safety warnings. Warnings indicate that serious injury can result from improper use of the laser or other optical device.



Warning

- Never look into the end of an optical cable that is attached to an optical output device. Laser light can be invisible and can severely injure the human eye and skin.
- Read the laser safety labels that are affixed to the device. Implement a level of laser safety that is appropriate for the class of the device.
- Wear protective eyewear at all times. Ensure that the eyewear is compatible with the wavelength in use.
- Replace eyewear that is pitted, cracked, crazed, scratched, discolored, or otherwise not in perfect condition.
- Maintain a high ambient light level in the area of operation. High ambient light constricts the pupil of the eye, which can reduce eye damage.
- Avoid blocking the output beam or reflections with any part of your body.
- Enclose the path of the laser beam whenever possible.
- Do not make connections or splices when the laser is on.
- Set up experiments or operations so the laser beam is below eye level.
- Use shields to prevent the escape of unnecessary reflections or beams from the area of operation.
- Use a metal beam target as a beam dump to prevent accidental exposure.
- Ensure all devices that have an ON/OFF switch are set to the OFF position before assembling or disassembling the equipment.
- Only use the power cord supplied with the device.
- Establish controlled access to the laser operation area.
- Do not allow anyone to operate the laser who is not trained to do so.
- Do not allow anyone to service or maintain the laser who is not trained and authorized to do so.

SPECIFICATIONS

Table 2 lists the optical specifications of the family of attenuators, Table 3 lists environmental specifications, and Table 4 lists mechanical and electrical specifications.

Optical Specifications

Table 2: Optical Specifications (typical)

Parameter	Specification	
	SM and PM	MM
Wavelength range	400 to 1625 nm	400 to 1625 nm
Attenuation range	IL to 60 dB	IL to 40 dB
Attenuation resolution (up to 10 dB attenuation)	0.01 dB	0.01 dB
Insertion loss (excluding connectors)	<1.5 dB typical 2.0 dB maximum	<2.0 dB typical 4.0 dB maximum
Wavelength dependence (up to 10 dB attenuation),	0.3 dB change, from 1300 to1550 nm 0.1 dB change from 1520 to 1570 nm	
Polarization dependent loss; at 23 °C and at minimum IL	up to 0.05 dB typical up to 0.01 dB minimum	
Backreflection (return loss, excluding connectors)	40, 50, or 60 dB	up to 35 dB
Speed[1]	3.0 dB attenuation change in ≤100 ms	
Repeatability of attenuator setting	±0.03 dB, up to 10 dB ±0.10 dB, up to 30 dB	±0.03 dB, up to 10 dB ±0.10 dB, up to 30 dB
Accuracy, relative to 23 °C	±0.3 dB, up to 40 dB ±0.5 dB, 40 to 55 dB ±1.0 dB, 55 to 60 dB	
Maximum optical power (up to 50 dB)	up to 2 W	up to 50 mW
Polarization extinction ratio (excluding connectors)	20, 25, or 30 dB (PM only)	

[1] Using a 485:1 gear ratio motor, when initially set to 10 dB attenuation. Actual performance will vary with initial attenuation and gear ratio.

Environmental Specifications Table

3: Environmental Specifications

Parameter	Specification
Temperature range: Operating Storage	 -10 to 50 °C (14 to 122 °F) -40 to 60 °C (-40 to 140 °F)
Humidity	<90% RH, non-condensing, at -10 to 50 °C (14 to 122 °F)

Mechanical and Electrical Specifications Table

4: Mechanical and Electrical Specifications

Parameter		Specification	
Motor resolution		48 steps/revolution of input shaft to gearbox	
Motor type		Two-phase stepper	
Power supply (Note 1)	Operating voltage	+4.8 to 13 VDC (3 watts maximum)	
		Motor stopped (typical)	Motor running (typical)
	@5V	120 mA	520 mA
	@12V	45 mA	182 mA
Logic inputs		Low: 0 to 1.5 volts	
		High: 3.5 to 5 volts	
Logic outputs		Low: 0 to 0.6V @ 8.5 mA	
		High: 4.3 to 5V @ 3 mA	
Communications protocol		RS-232 SPI Standard I^2C, up to 150 kilobits per second.	
Weight		<250 g (0.55 lb.)	
Housing dimensions (L x W x D)		71.12 x 38.1 x 20.32 mm (2.8 x 1.5 x 0.8 in.)	

The mechanical dimensions of the in-line style DD attenuator, excluding pigtail receptacles, are shown in Figure 5.

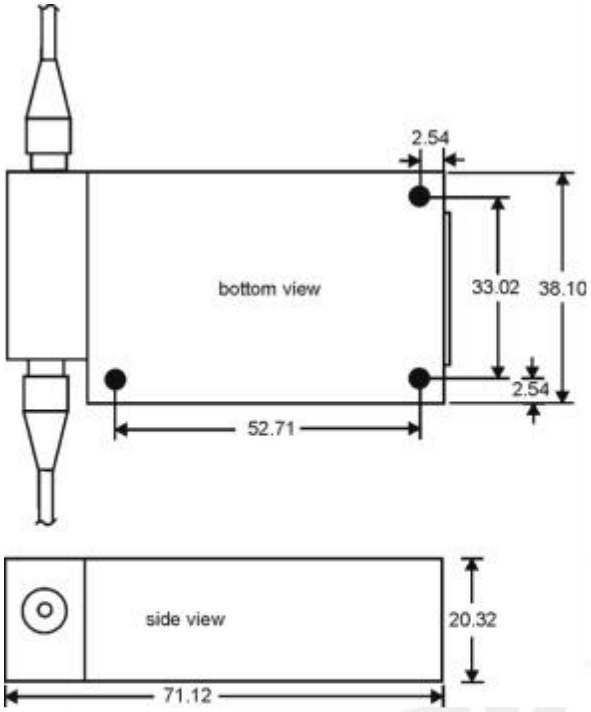

Figure 5: LBDD Dimensions (dimensions in mm)



Warning

LBTEK Optics products are not authorized for use as critical components in life support devices or systems without the express written approval of LBTEK Optics.

- Life support devices or systems are defined as devices or systems that are intended for implant into the body, or that support or sustain life. Failure of the life support device or system can result in significant injury to the user.
- A critical component is defined as any component of a life support device or system whose failure to perform can reasonably be expected to cause the failure of the life support device or system, or to affect its safety or effectiveness.

LBTEK

INSTALLATION

Before connecting the attenuator to the laser source and output fiber, read the complete installation instructions.



Caution

- Anti-static protection must be used when interconnecting these devices.
- Ensure that all personnel are familiar with all operation and safety instructions provided with the laser source and that are included with this document (*Safety*, **Introduction** section).
- Clean all optical connections, as described in the **Maintenance and. Service** section of this document.
- LBTEK Optics is not liable for any damage or harm caused by misuse of the source laser, LBTEK Optics devices, or both.

Checking the Shipment

When the attenuator is received from LBTEK

1. Unpack the items in the shipping container.
2. Retain the original packing materials and documentation that are shipped with the device.
3. Verify that the shipment contains the items that are listed on the packing slip.
4. When an item is missing or damaged, immediately inform LBTEK Optics. Do not attempt to repair a damaged item.
   Always return the device in its original packing materials. These materials are selected to reduce or eliminate damage caused by ESD.

Mounting the Optical Attenuator

The base of the attenuator has three 2-56 tapped mounting holes for attachment to a rack or printed circuit board. When mounting the attenuator:

- The mounting surface must be rigid and free of vibration.
- Do not over-tighten the mounting screws.
- Use screws with a thread length of less than 3.175 mm (0.125 in.).

Connecting the Optical Components

The attenuator is shipped with the customer-specified optical cables and connectors attached. To connect the optical components:

- Always inspect and clean the connectors before connecting to the attenuator. See the **Maintenance and Service** section of this document for information on cleaning connectors.
- Any optical components that are mated to the device must be compatible with the optical pigtails of the attenuator.
- Connect the fiber marked “Input” from the attenuator to the optical source.
- Connect the fiber marked “Output” to the destination.

Installing Cables and Connectors

LBDD have a 16-pin Hirose connector. The Hirose connector connects to a wire harness, which carries communication signals, power, and ground lines.

The communications cable is terminated with an RJ-11 connector that mates to the DB-9 adaptor. The adaptor connects to a DB-9 port on a PC to enable RS-232communications.

Power Supply

The user provides the power supply. Table 5 lists the pin assignments of the Hirose 16-pin connector and the input power requirements of the attenuator.

Table 5: Input Power to Hirose 16-Pin Connector

Pin	Colour	Label	Description
2	Black	GND	Common ground
3	Red	DC(+5~13V)	Supply Voltage (+5 to 13 volts)
6	Purple	DC(+5~13V)	Supply Voltage (+5 to 13 volts)

Hirose 16-Pin Connector

The pin assignments for the 16-pin Hirose connector on the attenuator are shown in Figure 6.

1	3	5	7	9	11	13	15
2	4	6	8	10	12	14	16

Figure 6: Hirose 16-Pin Connector

Before connecting the attenuator, turn on the power and use a voltmeter to ensure that the pin connections from the DB-9 cable have the correct voltage levels and polarity. Ensure that the power is off when connecting the wire harness to the 16-pin port.

Note

- The 16-pin communications connector, made by Hirose[1], is P/N: DF11-16DP-2DS(24)
- The compatible socket by Hirose is P/N: DF11-16DS-2C

RS-232 Connections

Figure 7shows the standard connection of the Hirose 16-pin connector for RS-232 communications. Table 6 lists the pin assignments of the cable connector for RS-232 communications.

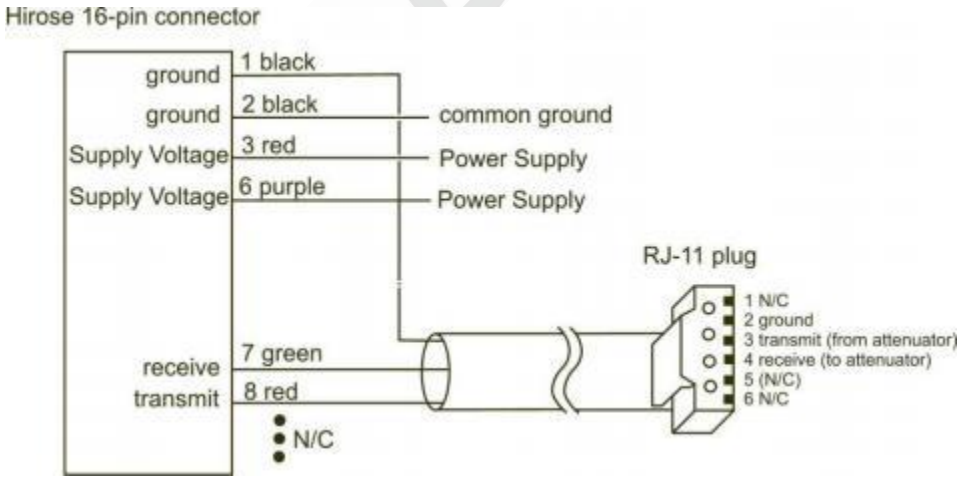

Figure 7: Pin Assignments and Cable Assembly for RS-232 Connection

[1] Hirose is Hirose Electric U.S.A.

Table 6 Pin Assignments for RS-232 Communications

Parameter or Pin	Colour	Label	Description
1	Black		Common ground
2	Black	GND	Common ground
3	Red	DC(+5~13V)	Supply Voltage (+5 to 13 volts)
4			No connection (N/C)
5			No connection
6	Purple	DC(+5~13V)	Supply Voltage (+5 to 13 volts)
7	Green		Receiver input (to attenuator)
8	Red		Transmitter output (from attenuator)
9 to 16			Used for I^2C or SPI

Figure 8 shows the RS-232 communications configuration. The crimped wires of the serial communications cable are inserted into the correct pins on the 16-pinconnector.

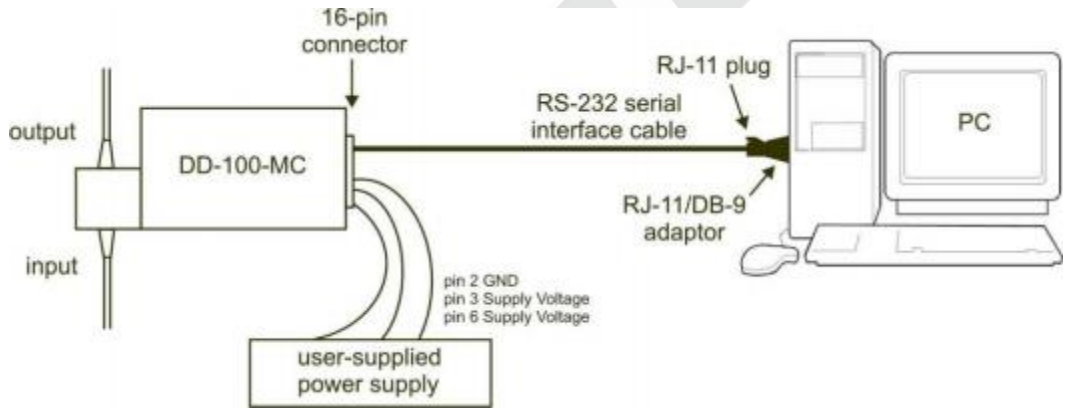

Figure 8: LBDD RS-232 Configuration

RJ-11 Connector

Pin assignments for the RJ-11 connector of the serial communications cable are shown in Figure 9 and listed in Table 9. The RJ-11 connector connects to the RJ-11/DB-9 adaptor.

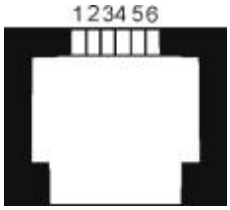

Figure 9: RJ-11 Connector

Table 9: RJ-11 Pin Assignments

Pin	Function
1	N/C
2	Ground
3	RS-232 transmit (from attenuator)
4	RS-232 receive (to attenuator)
5	N/C
6	N/C

DB-9 Connector

Pin assignments for the DB-9 connector of the RJ-11/DB-9 adaptor are shown in Figure 10 and listed in Table 10. This adaptor connects to the RJ-11 connector of the serial communications cable and to the DB-9 serial port of the computer.

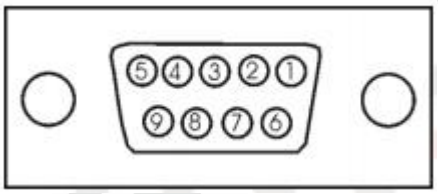

Figure 10:DB-9 Connector

Table 10: DB-9 Pin Assignments

Pin	Function
1	N/C
2	RS-232 transmit (from attenuator)
3	RS-232 receive (to attenuator)
4	N/C
5	Ground
6	N/C
7	N/C
8	N/C
9	N/C

OPERATION

An attenuator in the DD family of variable fiber optic attenuators is fully operational when connected to a light source, power supply, and personal computer.



Caution

Anti-static protection should be used when interconnecting these devices.

To connect and operate the attenuator:

1. Ensure that the light source is turned off or blocked.
2. Clean the fiber optic connectors, as described in the **Maintenance and Service** section of this document.
3. Carefully and securely attach the input and output connectors of the attenuator to the system where it will be used.
4. Connect the communications cable (RS-232) to the Hirose 16-pin connector on the attenuator. The pin assignments are described in the**Installation** section.
5. Connect the RJ-11/DB-9 adaptor to the RJ-11 plug of the communications cable.
6. Connect the DB-9 connector of the RJ-11/DB-9 adaptor to the DB-9 COM port on the PC.
7. Ensure that the power supply to the attenuator is the correct voltage and is properly grounded.
8. Turn on all components in the system. Allow the system to warm up and stabilize.
9. Verify that the initial message is displayed on the PC (see the **Communications** section of this document).

COMMUNICATIONS

Many applications require direct control of attenuation using a dumb terminal or personal computer (PC). The LBDD attenuator can be configured for RS-232 communications protocols to control attenuation from a remote location. The user selects the protocol when the attenuator is ordered from LBTEK Optics.

Applications can be written in high-level programming languages such as Visual Basic[1] or C, and lab automation software, such as LabWindows or LabVIEW[2]. The programs can be used to develop shortcut commands to collect, analyze, and plotdata.

The unit cannot be turned on or off with a remote computer terminal. When the attenuator is used in an inaccessible place, ensure that it is powered on.

Special Note:

When the attenuator is first powered on, and is connected through the RS-232 communications cable, or a reset command is sent, a message is displayed on the PC.

RS-232 Protocol

RS-232 communications are established with pins 2, 7 and 8 of the Hirose 16-pin connector, through a serial port of a PC. For RS-232 input, -25 to +25 VDC is accepted. The RS-232 output uses ±5 VDC.

To enable communications through a serial port, the settings, listed in Table 11, are used.

Table 11: RS-232 Settings

Parameter	Settings
Bits per second	9600 baud
Data bits	8 bits
Parity	none
Stop bits	1 bit
Flow control	none

When using RS-232 communications:

- ASCII commands are not case sensitive.
- Do not use spaces before, after, or between a command and a query (?) or numerical data entry (<n>). With the exception of carriage return (written as <*CR*>) and line feed pairs used to terminate commands, white spaces, such as space or tab characters, are not allowed in any command.
- To enter a command, type the command and press carriage return (<CR>).
- The unit ignores the linefeed, <LF>, in syntax.
- All RS-232 transmissions from the unit are terminated by a carriage return and line feed pair at the end of each output line.
- At start-up, or following a reset command, the unit transmits a series of strings to the RS-232 port to provide the user with information about the configuration of the unit.
- The unit transmits “Error-2” to the RS-232 port when a command cannot be completed because of a syntax error.
- The unit transmits “Error-6” to the RS-232 port when a command cannot be completed because it results in the unit stepping out of the valid step or calibration range.
- When Echo is on, whether the user sends <LF> or not, the device sends <LF> after the carriage return <CR>:

Syntax	Echo
E<LF>1<CR>	E1<CR><LF>
E1<CR><LF>	E1<CR><LF>
E1<LF><CR>	E1<CR><LF>

Using RS-232 Commands

Ensure that the motor is in a known position on initial power-up. Enter the home command as the first command.

All RS-232 commands are in ASCII format. ASCII commands are not case sensitive. Do not use spaces before, after, or between a command and a query (?) or numerical data entry (<n>). An incorrect command or data entry generates an error message.

The RS-232 commands used by the attenuator are listed in Table 12. To enter a command, type the command and press carriage return (<CR>), where noted.

Table 12: RS-232 Commands

<table>
<tr><th rowspan="2">Command</th><th rowspan="2">Description</th><th>Valid Commands</th></tr>
<tr><th>RS-232</th></tr>
<tr><td>A<n></td><td>Sets attenuation to <n>. Two digits to the right of the decimal point are allowed, but not required.</td><td>Yes<CR></td></tr>
<tr><td>A?</td><td>Gets attenuation.</td><td>Yes<CR></td></tr>
<tr><td>B</td><td>Steps the attenuator one step backward. Returns the final position after the command is completed.</td><td>Yes</td></tr>
<tr><td>CD</td><td>Sends the current unit configuration only to the RS-232 communications port.</td><td>Yes</td></tr>
<tr><td>CH<hh></td><td>Sets the I²C address to the hexadecimal address <hh> when the address <hh> is a valid I²C address between 0x00 and 0x7F.</td><td>Yes<CR></td></tr>
<tr><td>CI<ddd></td><td>Sets the I²C address to the decimal address <ddd> when the address <ddd> is avalid I²C address between 0 and 127.</td><td>Yes<CR></td></tr>
<tr><td>CS<cp><dp></td><td>Sets the SPI parameters to <cp> and <dp>, where <cp> is clock polarity and <dp> is data position.
<table>
<tr><th>CP</th><th>DP</th><th>SPI Operation</th></tr>
<tr><td>0</td><td>0</td><td>Clock is normally low; data is latched on falling clock edge</td></tr>
<tr><td>0</td><td>1</td><td>Clock is normally low; data is latched on rising clock edge</td></tr>
</table></td><td>Yes<CR></td></tr>
</table>

Command	Description			Valid Commands
				RS-232
	1	0	Clock is normally high; data is latched on rising clock edge (default)	
	1	1	Clock is normally high; data is latched on falling clock edge	
	Example: CS10 sets the idle state for the clock to a high level and data is latched on the rising edge of the clock.			
D	Gets current attenuation and step position.			Yes
E0	In RS-232 mode, sets echo to *OFF*. The unit does not echo any characters received through the RS-232 interface.			Yes<CR>
E1	In RS-232 mode, sets echo to *ON*. The unit echoes all characters received through the RS-232 interface.			Yes<CR>
EVA8	Set the unit in EVA8 mode			Yes<CR>
EVA9	Set the unit in EVA9 mode			Yes<CR>
EVA?	Requests the current EVA configuration mode			Yes<CR>
F	Steps the attenuator one step forward.			Yes
H	Re-homes the unit.			Yes
I2C?	Gets I2C/SPI bus Voltage			Yes<CR>
I2C3	Sets I2C/SPI bus voltage to 3.3V			Yes<CR>
I2C5	Sets I2C/SPI bus voltage to 5.0V			Yes<CR>
L<n>	Sets the unit's insertion loss to <n>. Two digits following the decimal point are allowed, but not required.			Yes<CR>
RES?	Read previous command response			Yes<CR>
RST	Restarts in response to a hardware or software reset (RST) command and is in self-test mode.			Yes<CR>
S?	Requests the current position of the attenuator. Returns the current number of steps from the home position.			Yes<CR>

Command	Description	Valid Commands
		RS-232
S<n>	Sets the position of the attenuator to <n> steps from the home position.	Yes<CR>
S+<n>	Sets the step position of the attenuator to <n> steps numerically greater than the current position.	Yes<CR>
S-<n>	Sets the step position of the attenuator to <n> steps numerically less than the current position.	Yes<CR>
W<n>	Selects the wavelength using <n>. This command is valid only when the unit is calibrated for more than one wavelength.	Yes<CR>

LBTEK

Command Descriptions

When communications are first established, or when the CD command is entered, the unit configuration is displayed.

Attenuation (A)

At the beginning of a session when installation is complete, always home the unit and measure the insertion loss of the system. When a specific attenuation level is required, precede the *A<n>* command with the home command.

Valid entries are values between the selected insertion loss (as low as IL = 0) and the maximum attenuation. Values such as .01, 0.01, 3, or 66.01 can be entered, but 0.00*n* values are rounded (for example, 1.005 becomes 1.01). Values must be inside the range of calibration. For cost sensitive applications, LBTEK Optics also sells un-calibrated versions of the LBDD. For such units, the Attenuation command is meaningless, and should not be used. Instead, only the Step commands (B, F, and S) should be used to increase or decrease the attenuation.

Command	Response	Description
A<n>	Pos:3502 Done	Enter an attenuation value <n> in dB. The motor position expressed as steps from the home position is returned. The example shows the motor position is 3502 steps from the home position.

The value of <n> in the A<n> command includes the insertion loss of the device (recorded on the Certificate of Compliance or as set by the user).

Command	Response	Description
A?	Atten:12.01(dB) Done Or: Atten:unknown Done	Read current attenuation value.

The device is calibrated starting at dB = 0 for 100% transmission. As the beam is attenuated, the dB values go to increasingly larger negative numbers, with -60 dB corresponding to 0.0001% transmission (that is, near the limit of detection of most optical power meters). The dB values, although negative, are entered as positive numbers. The valid range of attenuation values is from the insertion loss of the attenuator to (MAX ATTEN + insertion loss)

Backward Step (B)

Use the *B* command to go back one step from the current position. A backward step from the home position generates an error message.

Command	Response	Description
B	BPos:4443 Done	Go back one step from the current step position. In this example, the previous step was S4444; the current step (one step backward) is S4443. The “B” shown in the response is the echo of the input command. If Echo is turned off, then the letter “B” will not appear.

LBTEK

Configuration Display (CD)

Use the *CD* command to send the current attenuator configuration to the RS-232 output. This command outputs on the RS-232 transmit line in all modes. This is a valid RS-232 command, and the output is sent tothe RS-232 port.

DD100MC	unit model
V5.3	firmware version 5.3 unit
NO:247860-01	serial number
MAX ATTEN:<n>	maximum attenuation, in -dB (excluding insertion loss) single-mode valid range: 00.00 to 60.00 dB multimode valid range: 00.00 to 40.00 dB
OVERSHOOT:<n>	LBTEK calibration, insteps
CALIB :APR-27-2020	date of calibration, mth-dd-yyyy
GEAR RATIO:485:1	reduction gear ratio
MINTERVAL(MS):0.90	motor time between steps motor
MOTOR VOLT:5	supply voltage
IL:0.00	user-set insertion loss
WAVE LENGTH:1300	calibration wavelength in nm
I2C ADDRESS:64	unit I²C address in decimal (or SPIxy where x is the SPI clock polarity and y is the SPI data position. See the CS command for details).
W0 1300	calibrated wavelength
W1 1550	calibrated wavelength
W2 1625	calibrated wavelength
Done	

I²C Hexadecimal Address (CH)

Use the *CH* command to set the 7-bit I²C address, sent as two hexadecimal characters. The change takes effect immediately. The unit only responds to the I²C address specified by <hh>. When the specified address is out of range, the unit reports an error message and the I²C address remains unchanged.

Command	Response	Description
CH<hh>	Done	Set the 7-bit I²C address in hexadecimal. Enter the command, where *<hh>* is a valid I²C address between 0x00 to 0x7F.

I²C Decimal Address (CI)

Use the *CI* command to set the 7-bit I²C address in decimal. The change takes effect immediately. The unit only responds to the I²C address specified by <ddd>. When the specified

address is out of range, the unit reports an error message and the I²C address remains unchanged.

Command	Response	Description
CI<ddd>	Done	Set the 7-bit I²C address in decimal. Enter the command, where <*ddd*> is a valid I²C address from 0 to127.

Clock State (CS)

To use the SPI command *CS*<*cp*><*dp*>, the high or low idle state of the clock is set by <cp>. Data transmission on the rising or falling edge of the clock is set by <dp>.

Command	Response	Description
CS<cp><dp>	Done	Set the SPI clock polarity <cp> and clock edge <dp> (or data position). For example, CS10 sets the idle state for the clock to a high level and data is latched on the rising edge of SCL. This is also the default setting.
CS00	Done	The idle state for the clock is set to a low level; data is latched on the falling edge of SCL.
CS01	Done	The idle state for the clock is set to a low level; data is latched on the rising edge of SCL.
CS10	Done	The idle state for the clock is set to a high level; data is latched on the rising edge of SCL (default).
CS11	Done	The idle state for the clock is set to a high level; data is latched on the falling edge of SCL.

When the unit executes a command, it outputs 0x00 to the master unit when polled. This data indicates completion and that the unit is ready for the next command. Use the value 0x0A (hexadecimal) for the polling command.

When only one parameter is entered with the CS command, an error message (Error-2) is generated. To correct the error, enter the command with both parameters.

Display Step and Attenuation (D)

Use the *D* command to display the current step and attenuation. When the D command is entered, the message displayed is:

Command	Response	Description
D	DPos:3502 ATTEN:6.00 Done	Display step and attenuation. In this example, the attenuator motor is 3505 steps from the home position and the attenuation is 6.0 dB. The leading "D" shown in the response is the echo of the input command. If Echo is turned off, then the letter "D" will not appear.
D	S4444 Pos:4444 Done DPos:4444 ATTEN:6.00 Done	When the step is changed with the S<n> command, the D command displays the last value of attenuation and not the current value.

Echo (E)

When echo is on, the command (input) is retransmitted to the host. When echo is off, the response to the command is transmitted but the input is not.

Command	Response	Description
E0	Done	Set echo off.
E1	Done	Set echo on.

EVA configuration settings (EVA8/EVA9/EVA?)

Command	Response	Description
EVA8	Set I2C command format as: EVA8 Done	Sets the unit to EVA8 mode.
EVA9	Set I2C command format as: EVA9 Done	Sets the unit to EVA9 mode.
EVA?	EVA8 Done	Requests the current EVA configuration mode

Forward Step (F)

Use the *F* command to go forward one step. The maximum number of steps that can be entered is 24000.

Command	Response	Description
F	FPos:4445 Done	Go forward one step from the current step position. In this example, the previous step was S4444; the current step (one step forward) is S4445. The leading "F" shown in the response is the echo of the input command. If Echo is turned off, then the letter "F" will not appear.

Home (H)

Use the *H* command to put the mechanical elements of the attenuator into a fixed, known position. The attenuation level at the home position is generally at a minimum value for single- mode systems.

At the beginning of a session, always home the unit. When a specific attenuation level is required, precede the *A<n>* command with the home command. While the home command executes, the attenuation level sweeps through a range of values, which can range between the minimum and maximum attenuation settings.

Command	Response	Description
H	Diff = *n* Done	Drive the unit to the step-zero home position. (The value of *Diff* is used by LBTEK Optics for diagnostics.)

Insertion Loss (L)

Use the *CD* command to check the current value (this command gives the start-up messages). A measured value allows the inclusion of the insertion loss (*L*) of a larger part of the system. The unit subtracts this insertion loss from entered values of attenuation.

Command	Response	Description
L<n>	L<n> Done	Enter the factory-measured insertion loss (in dB; refer to the Certificate of Compliance), or select a measured value. The maximum value for <n> is 20 dB. Values greater than that will generate Error-6. If the unit is calibrated for more than one wavelength, then each wavelength has its own insertion loss. Modifying one setting does not change the other insertion loss for any other wavelengths. When the correct insertion loss for the attenuator is entered, the total attenuation through the attenuator will match the displayed value of attenuation. If the insertion loss is incorrect, then the overall attenuation through the attenuator will have a slight offset from the displayed value. The L command is useful in situations where one would like to compensate for additional losses within a system, or where the insertion loss may vary from the ideal conditions.

Restart (RST)

Use the *RST* command to re-initialize the unit. The unit will go into self-test mode. The same status information that is displayed at power up is displayed.

Command	Response	Description
RST	DD100MC **V5.3** **NO:247860-01** MAX ATTEN:60 OVERSHOOT:100 CALIB : **APR-27-2020** GEAR RATIO:485:1 MINTERVAL(MS):0.9 IL:20.00 WAVELENGTH:1310 I2C ADDRESS:64 W0 1310 W1 1550 Done	Return the current attenuator configuration. Values for these parameters depend on the configuration of each device. The “I2C ADDRESS” will only be returned in I2C mode. In SPI mode, the returned text for that line will be “SPIxy”. where x is the SPI clock polarity (0 or 1) and y is the SPI data position (0 or 1). See the CS command for details.

Steps (S)

Use the *S* command to set the motor to an absolute number of steps <n> from the current position or the home position.

Command	Response	Description
S?	Pos:560 Done	Display the current step. The example shows the current position is 560 steps from home.
S<n>	Pos:4434 Done	Set step to <n>. The example shows the current step is set to 4434 steps from home.
S+<n>	Pos:4435 Done	Increment the current step by **<n>**steps. The example shows that step 4434 is incremented by one step to 4435 steps from home.
S-<n>	Pos:4434 Done	Decrement the current step by **<n>**steps. The example shows that step 4435 is decremented by one step to 4434 steps from home.

Wavelength (W)

Use the *W* command to change the wavelength. When two or more calibrated wavelengths are required, the wavelengths must be specified when the attenuator is ordered.

Command	Response	Description
W<n>	Pos:2049 Done	<n> represents a single digit. W0 refers to the shortest calibrated wavelength. W1 represents the next calibrated wavelength longer than that represented by W0. W2 represents a calibrated wavelength longer than W1, and so on. The unit returns the motor position expressed as steps from the home position. The example shows the motor position is 2049 steps from the home position. In a typical system calibrated at 1310 and 1550 nm, enter W0 to select operation at 1310 nm or W1 to select operation at 1550 nm. Note that W0 (or W1) may refer to different operating wavelengths on different attenuators if they were calibrated at different wavelengths, or if two attenuators have a different number of calibrated wavelengths. The association between W0 (or W1, etc.) and the corresponding wavelength can be seen by observing the response to the “CD” command or the “RST” command. The “CD” command can be used to verify the new setting. If the unit is only calibrated at a single wavelength, then an Error-6 message will be returned for <n> greater than 0. When switching from one wavelength to another using the W<n> command, the motor position will change so that the attenuation at the new wavelength matches the attenuation at the previously selected wavelength.

Error Messages and Return Codes

When an incorrect command is entered, an error message is normally output, except where previously noted.

Table 13 shows the error codes and the status of the LBDD when the code is returned.
Table 14 shows the ASCII, decimal, and hexadecimal values of the characters in the return codes.

Table 13: Error Return Codes

RS-232	Status Description
N/A	Unit is reset and is ready to process commands.
Done	Command complete. Unit is ready to process commands.
N/A	Unit is busy or processing a command.
Error-2	Bad command. The command is ignored.
Error-5	Home sensor error. This is an internal error; return the unit to the factory for repair.
Error-6	Overflow. The requested action causes the unit to exceed its internal limits and the command is ignored.
Error-7	Motor voltage exceeds safe limits. This message will be generated if the motor voltage exceeds approximately 15 volts.

Table 14: RS-232 Return Code Values

Return Code	RS-232 Return Code Values								
Done									
ASCII characters	**D**	**o**	**n**	**e**	**<CR>**	**<LF>**	_	_	_
Decimal code	68	111	110	101	13	10	_	_	_
Hex code	44	6F	6E	65	0D	0A	_	_	_
Error-2									
ASCII characters	**E**	**r**	**r**	**o**	**r**	**-**	**2**	**<CR>**	**<LF>**
Decimal code	69	114	114	111	114	45	50	13	10
Hex code	45	72	72	6F	72	2D	32	0D	0A
Error-5									
ASCII characters	**E**	**r**	**r**	**o**	**r**	**-**	**5**	**<CR>**	**<LF>**
Decimal code	69	114	114	111	114	45	53	13	10
Hex code	45	72	72	6F	72	2D	35	0D	0A
Error-6									
ASCII characters	**E**	**r**	**r**	**o**	**r**	**-**	**6**	**<CR>**	**<LF>**
Decimal code	69	114	114	111	114	45	54	13	10
Hex code	45	72	72	6F	72	2D	36	0D	0A

For example (with echo on), the incorrect format for a command (F, forward one step) is entered:

Command	Response	Description
F01	Error-2	Incorrect format for the command. To correct the error, input the correct command.

MAINTENANCE AND SERVICE

Maintenance

The attenuator requires periodic maintenance.

- Inspect the connector before use. Worn cable jackets or damaged connectors require replacement.
- Keep the device free of dust, dirt, or other contaminants.
- When not attached to an optical system, the connector must be covered with the supplied cap, which protects the connector from dirt and contamination.
- Never open the protective casing of the device, or otherwise disassemble the unit. This invalidates the warranty on the device.



Caution

- The unit contains polycarbonate parts, which may be soluble in chlorinated hydrocarbons and ketones.
- Recommended cleaning agents are methanol and isopropanol.

leaning the Fiber Optic Connectors

The connectors on the fibers must be kept as clean as possible at all times. Dirt on the connectors can scratch the optical surfaces and damage the receptacle and can affect the optical properties of the fiber. Cleaning also ensures that the ferrule or connector and the fiber mate properly.



Warning

- Turn off all light-emitting devices. Concentrated or laser light can severely damage the eye. Reflected light from a concentrated source can severely damage the eye.
- Never look directly at a beam of light, regardless of its source.
- Disconnect fiber optic cables from the light source before cleaning the ferrules, connectors, or receptacles.

Cleaning Ferrules and Connectors

Cleaning ensures that the ferrule or connector and the fiber mate properly. Dirt can also affect the optical properties of the fiber. To clean fiber optic ferrules and connectors:

1. Assemble all cleaning supplies or equipment. It is recommended that connectors be cleaned each time they are connected or reconnected.
2. Ensure that all devices that have ON/OFF power switches are set to the OFF position.
3. Carefully remove the protective cap, if it is in place, from the ferrule or connector or disconnect the fiber optic cable from the device to which it is attached.
4. Inspect each ferrule or connector for visible physical defects and damage. Defects and damage to the core or cladding, indicated by a high insertion loss, can be confirmed by examination with a microscope.
5. Fold several layers of lint-free paper tissues to form a small pad. Place the pad on a firm surface.
6. Apply one or two drops of isopropanol on the pad.
7. Gently wipe the tip of the ferrule or connector across the pad of tissues. Hold the ferrule or connector perpendicular to the pad.
8. With the same motion, finish the wiping motion on a dry section of the pad of tissues.
9. Frequently refresh the pad of tissues and the isopropanol when cleaning several ferrules or connectors.
10. Carefully inspect the tip of the fiber under reflected light. The tip must be clean and shiny.
11. Ensure that the protective cap is clean and free from defects. Replace caps that are stained, worn, misshapen, or defective in anyway.
12. Carefully place the protective cap on the ferrule or connector, or immediately connect the ferrule or connector to a port or receptacle.

Cleaning Receptacles

Female receptacles require periodic cleaning. Cleaning ensures that the connector and fiber mate properly and can prevent damage to the receptacle and the fiber. To clean female receptacles:

1. Assemble all cleaning supplies or equipment. It is recommended that connectors be cleaned each time they are connected or reconnected.
2. Ensure all devices that have ON/OFF power switches are set to the OFF position.
3. Carefully remove the protective cap, if it is in place, from the receptacle.
4. Use compressed air to blow dust or dirt off the connector. Do not blow air directly into the receptacle.

5. With a pair of scissors, cut off one end of a round toothpick, to make the end flat. Remove any splinters from the flat end of the toothpick.
6. Wrap a single leaf of lint-free tissue, about 25 mm (about 1.0 in.) square, around the flat end of the toothpick, as shown in Figure 11. The tissue must be wrapped smoothly and tightly and extend approximately 2 mm (3/32 in.) past the end of the toothpick. Taper the end of the paper slightly.

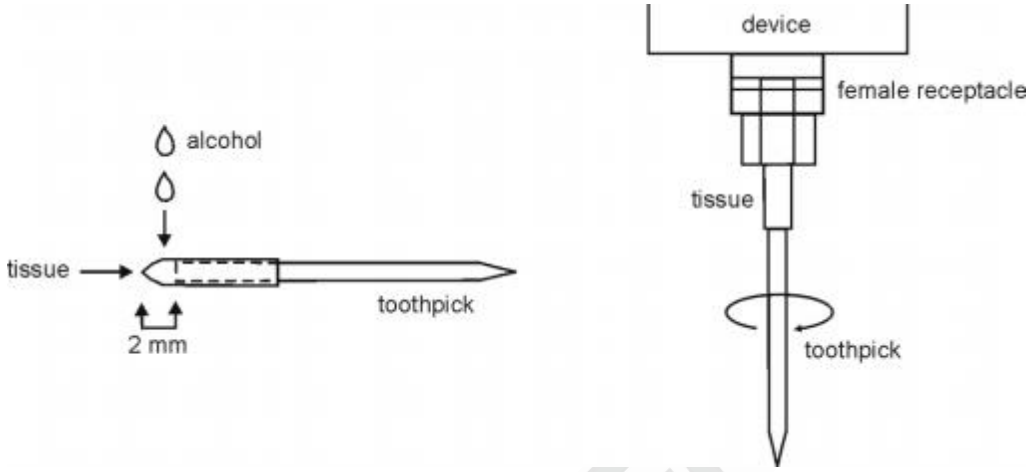

Figure 11: Cleaning FemaleReceptacles

7. Apply one or two drops of isopropanol or methanol to the tip of the tissue paper.
8. Hold the device so that the receptacle of the device is pointing down. Insert the toothpick and tissue into the receptacle until the end of the toothpick is flat against the ferrule inside the receptacle.
9. Rotate the toothpick and tissue two or three turns. Remove the toothpick and tissue.
10. Inspect the tissue. If dirt is visible on the tissue, repeat Step 6 to Step 9 until the tissue remains clean. Re-wrap the toothpick with new tissue each time.
11. Use new tissue for each receptacle when cleaning more than one receptacle.

Troubleshooting

Some typical problems are listed in Table 15. Contact LBTEK Opticstechnical support when an unusual problem occurs.

Table 15: Troubleshooting

Problem	Action
The insertion loss is too high.	• Allow the source to warm up and stabilize (usually for 15 to 30 minutes). • Verify that all connectors are clean and undamaged. • Verify that the correct patchcords are connected. • Check that the fiber is securely seated in the receptacle on the connector. • Verify that the reference is correct (0 dB from the source to the power meter). • Ensure that there are no stresses applied to the attenuator or the fiber connected to it; stresses can affect the alignment.
The attenuation level is changed with the A<n> command, but the output power remains the same.	• Verify that the cables and patchcords have good connections. • Ensure that the source is turned on.
There is difficulty establishing DD-to-PC communications.	• Verify that the cables and patchcords have good connections. • Ensure power supplies are connected and turned on. • Verify that the computer settings match those on the attenuator (RS-232 defaults are 9600 baud, 8 data bits, no flow control, parity none, and one stop bit).
There are no readings at the start of a new session.	• Enter the home command (H) as the first command after power-up or reset.
The power level is offset by a fixed amount from the actual power level.	• Verify the value of the insertion loss and enter the correct IL value.



麓邦公众号

产品上新/商城活动/技术文章/展会会议

麓邦商城 — 您身边的光电实验好帮手！

深圳市麓邦技术有限公司

Shenzhen LUBON Technology Co.,Ltd.

地址：深圳市南山区打石一路深圳国际创新谷6栋A座2103

电话：400-060-6986

官网：www.lubon.com

邮箱：service@lbtek.com ; sales@lbtek.com

长沙麓邦光电科技有限公司

Changsha LUBON Photoelectric Technology Co.,Ltd.

地址：长沙市岳麓区环创企业广场A6栋

电话：400-060-6986

官网：www.lbtek.com

邮箱：service@lbtek.com ; sales@lbtek.com

400-060-6986