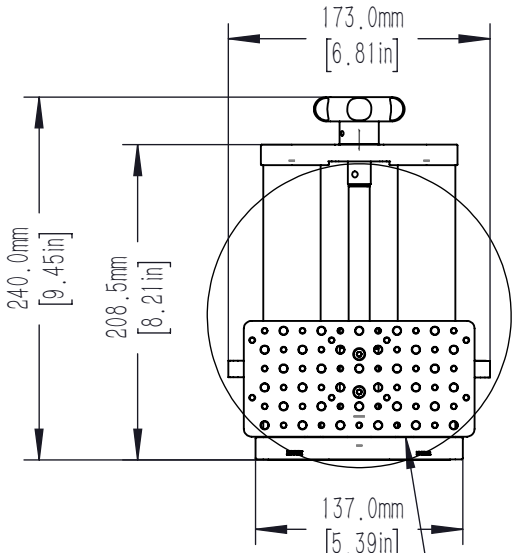

RUBBER BUMPER, 2 PLACES
PROVIDES ADDITIONAL PROTECTION
DURING QUICK RELEASE

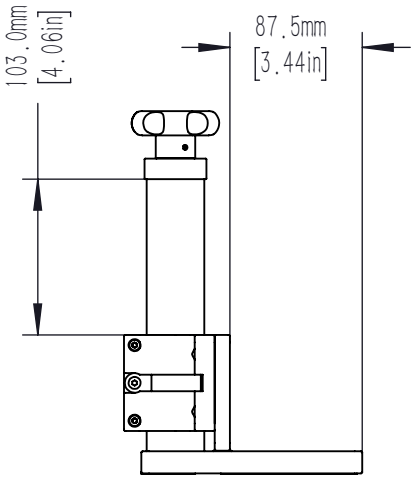

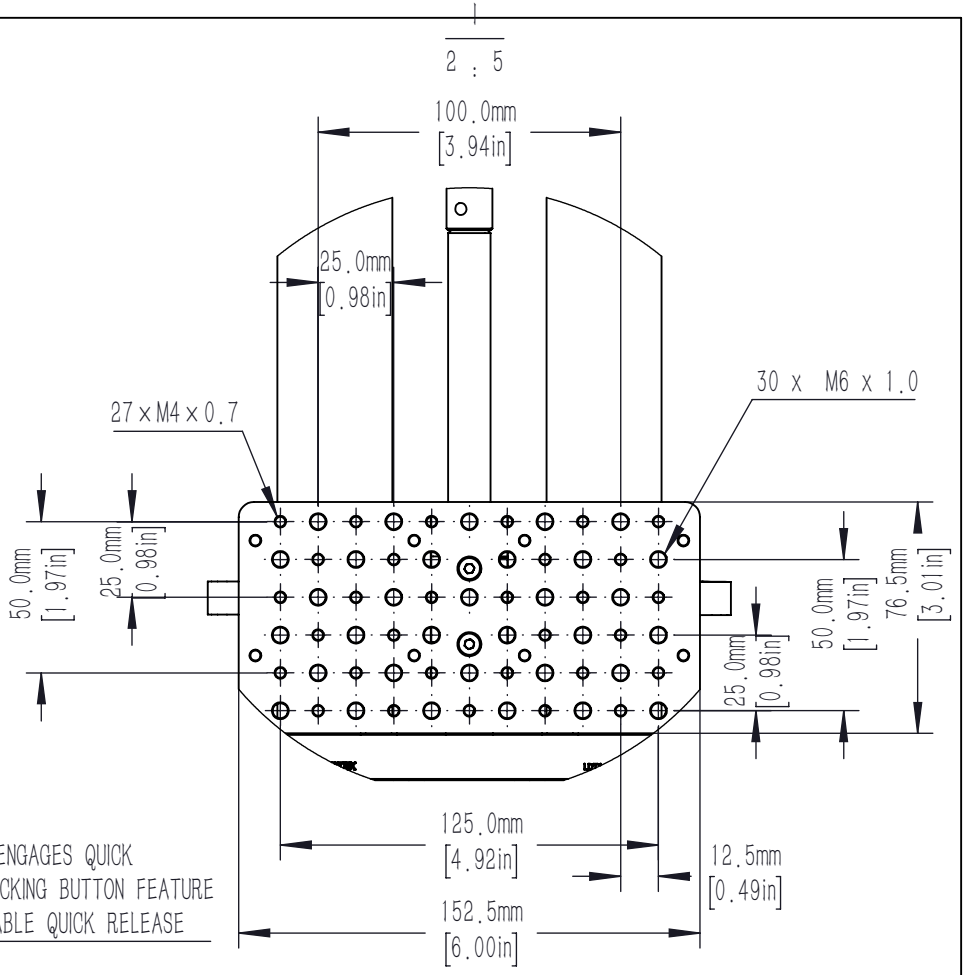

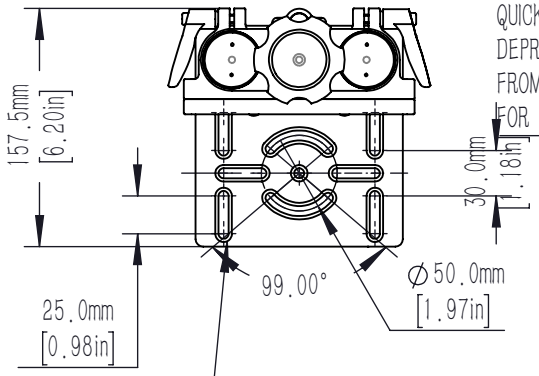

QUICK RELEASE BUTTON
DEPRESS TO DISCONNECT
FROM LEAD SCREW
FOR COARSE ADJUSTMENT

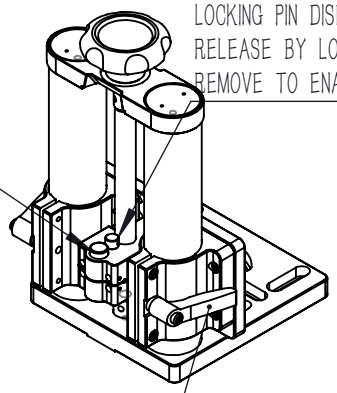

LOCKING PIN DISENGAGES QUICK
RELEASE BY LOCKING BUTTON FEATURE
REMOVE TO ENABLE QUICK RELEASE

9xCOUNTERBORED HOLES
TO SUIT M6 HEXAGON SOCKET
HEAD CAP SCREW

ADJUSTABLE M6 x 1.0 THREADED
REMOVABLE HANDLE (INCLUDED)
FOR SECURING ADJUSTMENT PLATFORM
2 PLACES

DRAWING PROJECTION			LBTEK			
	NAME	DATE	LDT102			
DRAWN	CZH	FEB./22nd/23	LONGITUDINAL DISPLACEMENT TABLE			
APPROVAL	ZXU	FEB./22nd/23	MATERIAL	WEIGHT	SCALE	REV
FOR INFORMATION ONLY NOT FOR MANUFACTURING PURPOSES			N/A	5.2 Kg	1:5	B