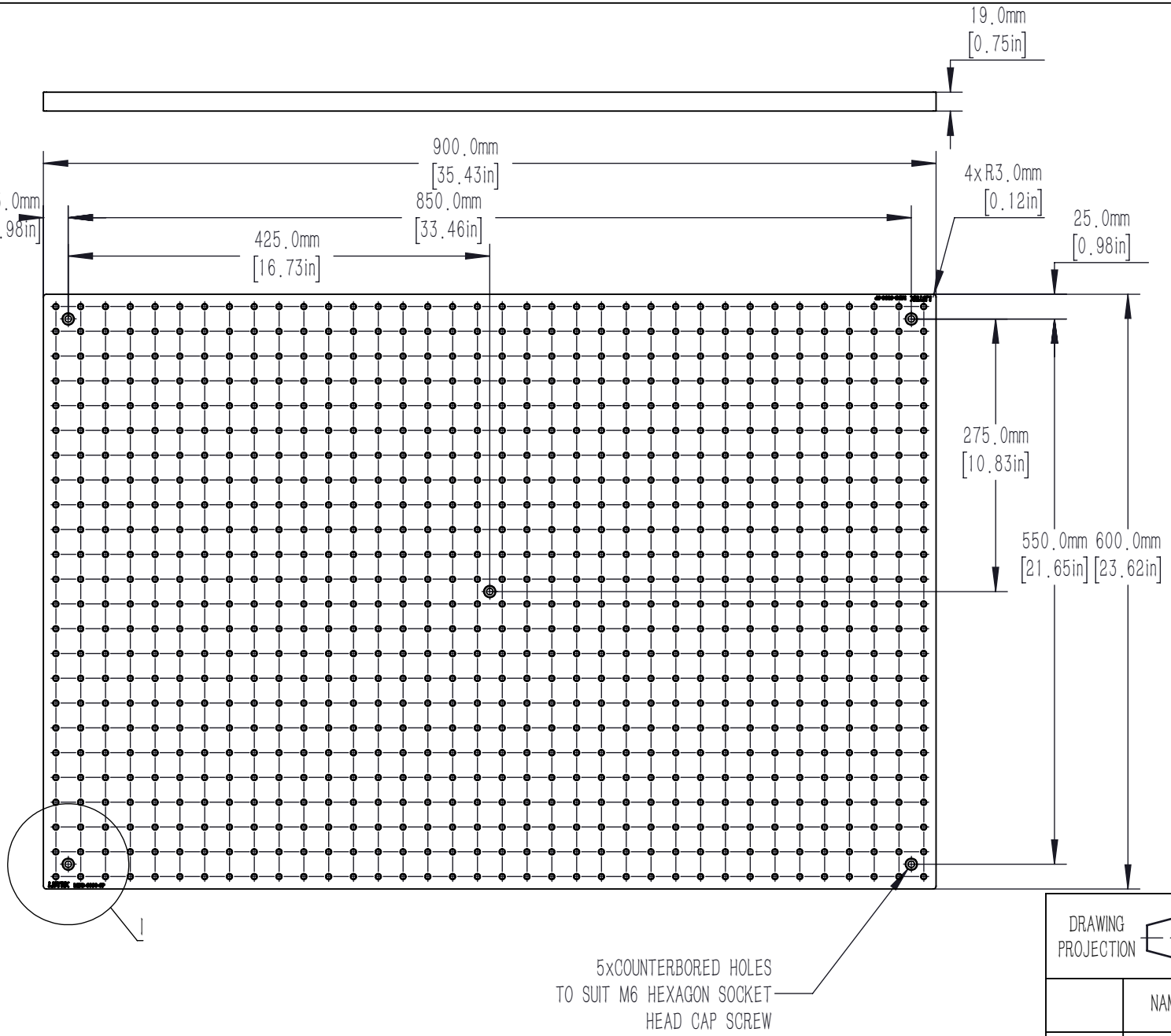

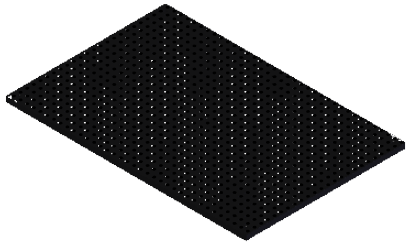

SCALE 1:20

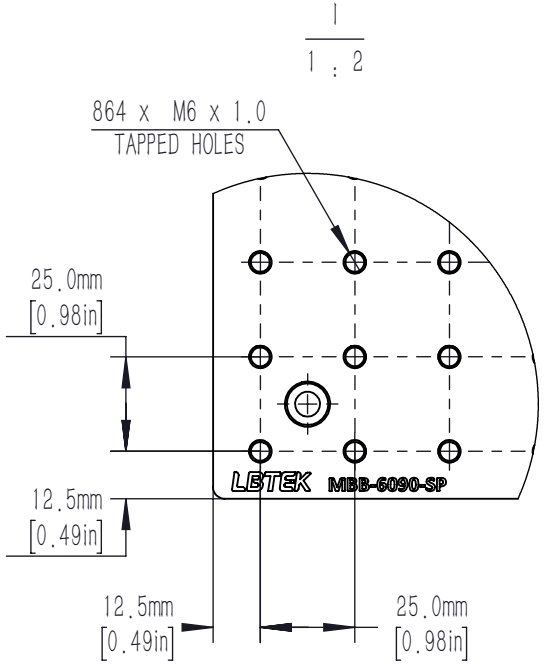

DRAWING PROJECTION			LBTEK			
	NAME	DATE	MBB–6090–SP			
DRAWN	ZHE	AUG./21th/19	ALUMINIUM BREADBOARD			
APPROVAL	ERIC	AUG./21th/19	MATERIAL	WEIGHT	SCALE	REV
FOR INFORMATION ONLY NOT FOR MANUFACTURING PURPOSES			N/A	26.81 Kg	1:6	B