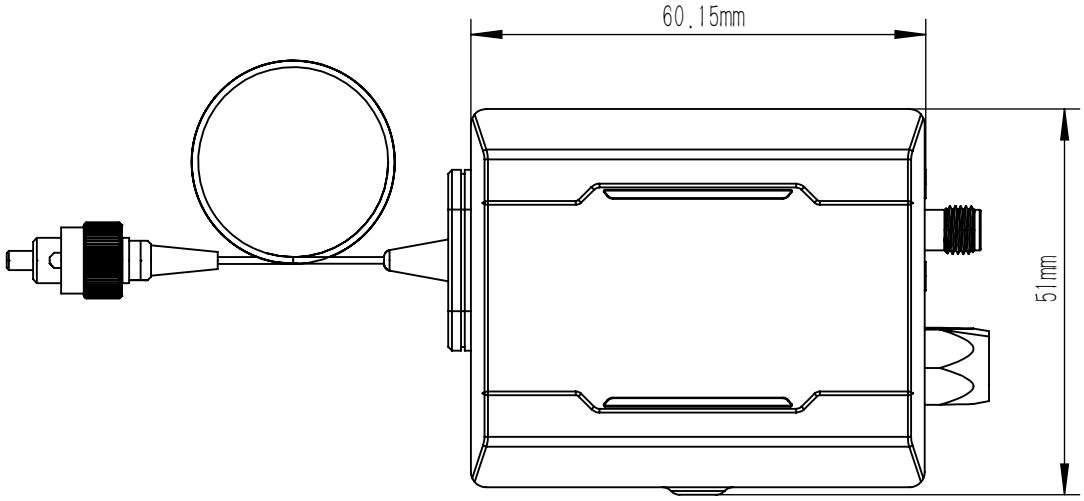


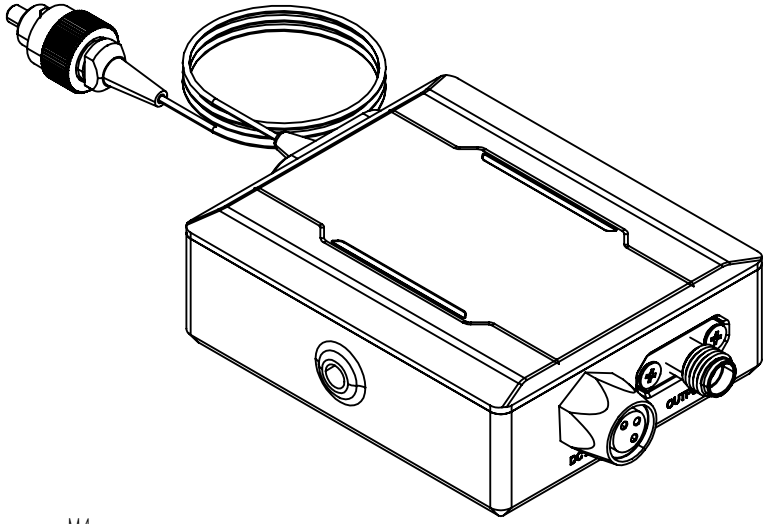

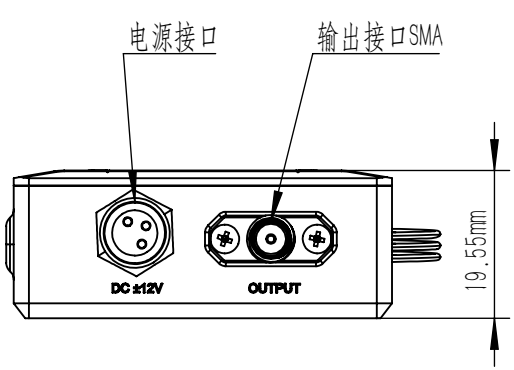


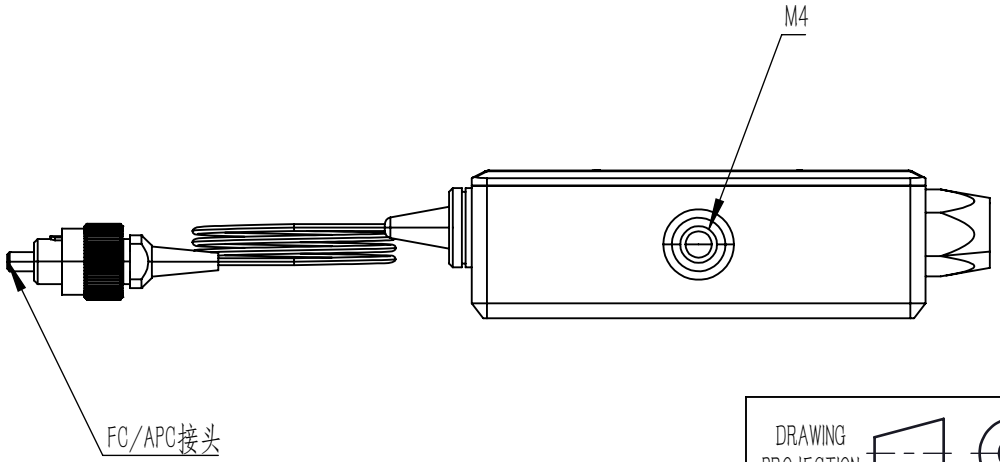


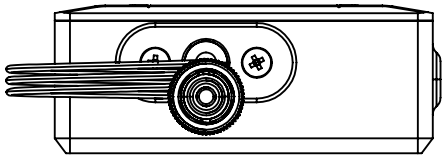

| | | | | | | |
|---|---|---|---|---|---|---|
| DRAWING PROJECTION | | | LBTEK | | | |
| | NAME | DATE | PDIN045-10G-APC | | | |
| DRAWN | PNIU | JUN./26th/26 | High-speed amplification photodetector | | | |
| APPROVAL | ZHWANG | JUN./26th/26 | MATERIAL | WEIGHT | SCALE | REV |
| FOR INFORMATION ONLY NOT FOR MANUFACTURING PURPOSES | | | | g | 1:1 | A |