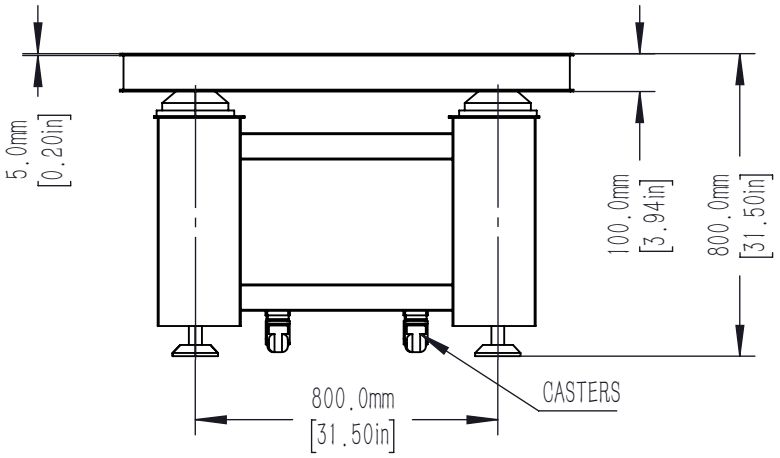

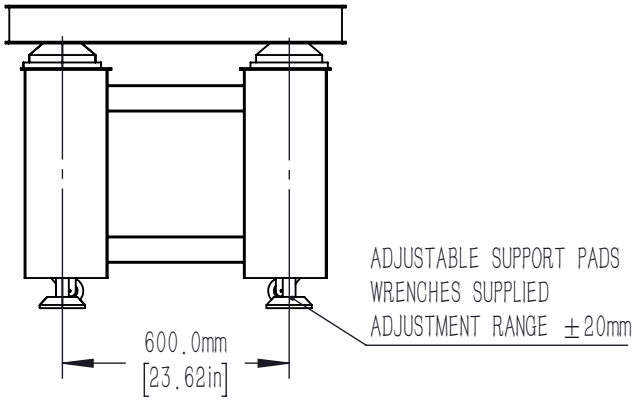

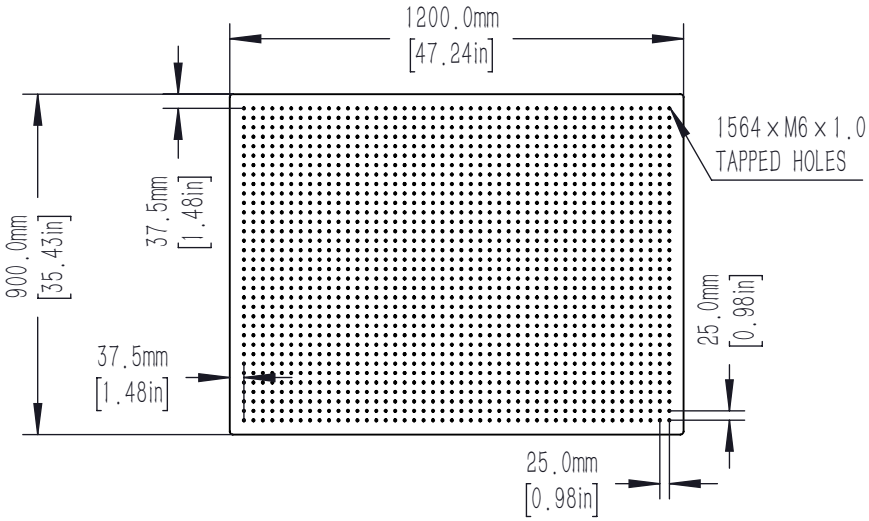

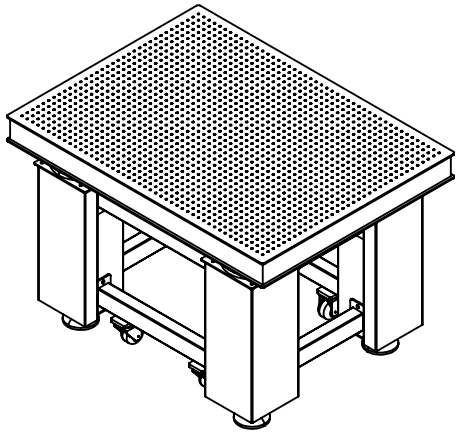

NO.	WEIGHT/Kg	PLATFORM WEIGHT/Kg	BEARING/Kg
1	230	145	400

DRAWING PROJECTION			LBTEK			
	NAME	DATE	DIT1209			
DRAWN	TL	Aug./6th/26	DAMPING AND VIBRATION ISOLATION OPTICAL PLATFORM			
APPROVAL	YHL	Aug./6th/26	MATERIAL	WEIGHT	SCALE	REV
FOR INFORMATION ONLY NOT FOR MANUFACTURING PURPOSES			N/A	– Kg	1:20	A