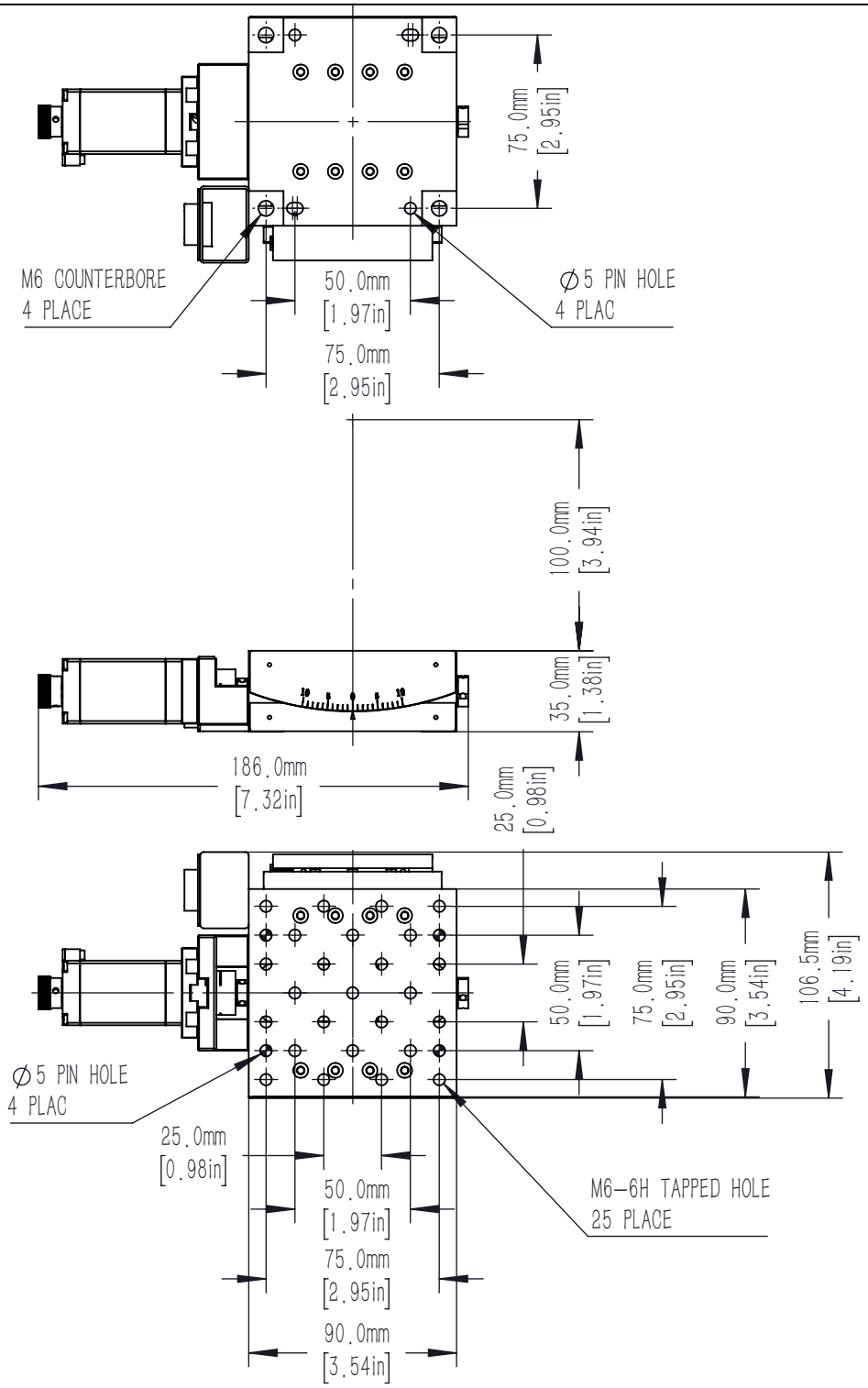

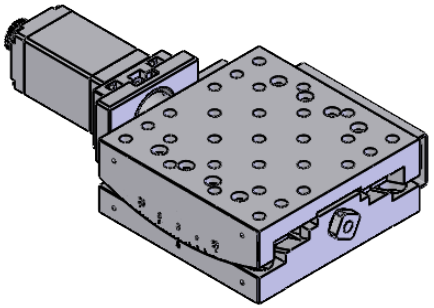

DRAWING PROJECTION			LBTEK www.lbtek.com			
	NAME	DATE	EM-AS90-100C1			
DRAWN	BJU	MAR./2th/22	ELECTRIC ANGLE STAGE			
APPROVAL	ZXU	MAR./2th/22	MATERIAL	WEIGHT	SCALE	REV
FOR INFORMATION ONLY NOT FOR MANUFACTURING PURPOSES			N/A	1.1Kg	1:3	ZA