

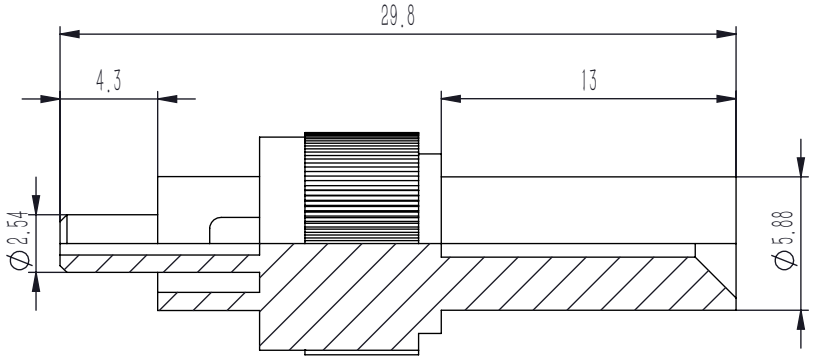

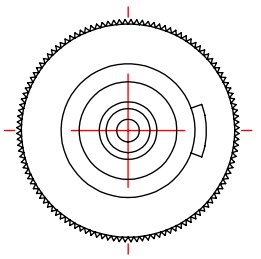

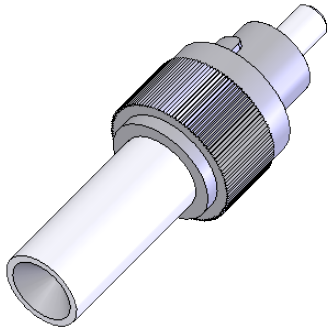

DRAWING PROJECTION			LBTEK			
	NAME	DATE	OFA–FC–AD–BF–C			
DRAWN	YLIU	JUN./15th/26	Bare Fiber Adapter			
APPROVAL	WZCHENG	JUN./15th/26	MATERIAL	WEIGHT	SCALE	REV
FOR INFORMATION ONLY NOT FOR MANUFACTURING PURPOSES			N/A	0.00 Kg	3:1	ZA